INNOVATOR IN ELECTRONICS

SCH16T-K30 Data Sheet

6-DOF Gyroscope and Accelerometer with Digital SPI Interface

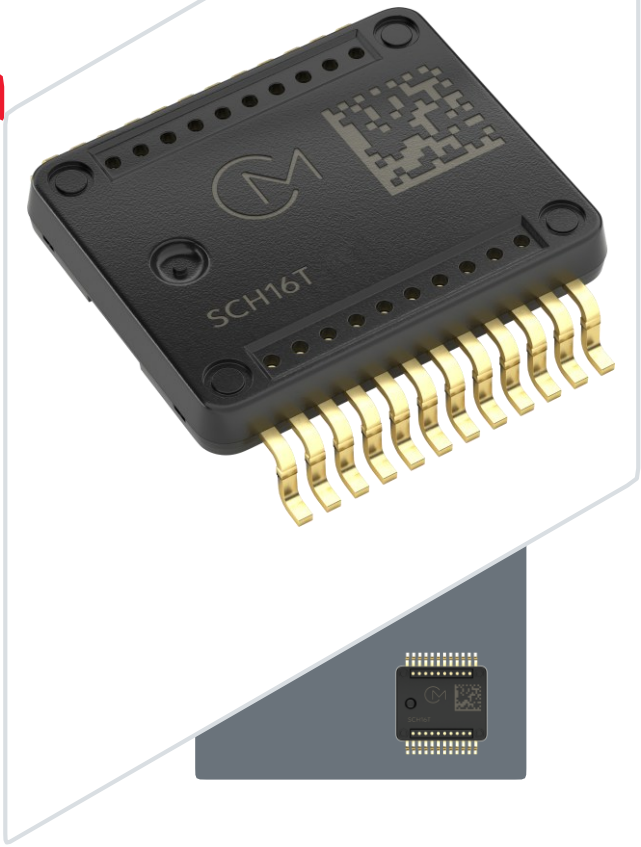

Features

- Gyroscope measurement range ±490 °/s
- Accelerometer measurement range ±160 m/s² (XY) ±150 m/s² (Z) with saturation limit of ±1800 m/s² @1000 Hz
- Options for output interpolation and decimation
- Angular rate and acceleration low pass filters from 13 Hz to 370 Hz cut-off rate
- Data Ready output, timestamp index and SYNC input functions for clock domain synchronization
- -40...110 °C operating temperature range
- 3.0...3.6 V supply voltage, 1.7…3.6 V I/O supply voltage
- SafeSPI v2.0 interface
- 20-bit and 16-bit output data, selectable via SPI frame
- Advanced self-diagnostic system automatically reports sensor status in every SPI frame, leveraging over 200 internal monitoring signals
- 11.8 mm x 13.4 mm x 2.9 mm (l x w x h) SOIC-24
- Qualification based on AEC-Q100 standard
- Supports system level safety classification
- No restrictions on sensor array configurations

Applications

SCH16T-K30 is targeted at applications demanding high performance with demanding environmental requirements. Typical applications include:

- Heavy machinery
- Survey poles

Application restriction

- https://www.murata.com/en-global/support/militaryrestriction

Overview

The SCH16T-K30 is a combined high-performance 3-axis angular rate and 3-axis accelerometer. The angular rate and accelerometer sensor elements are based on Murata's proven capacitive 3D-MEMS technology. Signal processing is done by a single mixed-signal ASIC that provides angular rate and acceleration via a flexible SafeSPI v2.0 compliant digital interface. Sensor elements and ASIC are packaged to pre-molded SOIC 24-pin plastic housing that guarantees reliable operation over the product's lifetime.

The SCH16T-K30 is designed, manufactured, and tested for high stability, reliability, and quality requirements. The component has extremely stable output over temperature, humidity, and vibration. The component has several advanced self-diagnostic features, is suitable for SMD mounting and is compatible with RoHS and ELV directives.

TABLE OF CONTENTS

1 Introduction 4
2 Product and packing quantity information 4
3 Specifications 4
3.1 Abbreviations 4
3.2 General specifications 5
3.3 Absolute maximum ratings 5
3.4 Gyroscope performance specifications 6
3.5 Accelerometer performance specifications 8
3.6 Gyroscope typical performance characteristics 10
3.7 Accelerometer typical performance characteristics 11
3.8 Temperature sensor performance specifications 12
3.9 Gyroscope and accelerometer frequency response and filter characteristics 13
3.10 Pin description 14
3.11 Digital I/O specification 16
3.12 SPI AC characteristics 16
3.13 Measurement axis and directions 18
3.14 Package outline and dimensions 19
3.15 PCB footprint 20
4 General product description 21
4.1 Component block diagram 21
4.2 Accelerometer 22
4.3 Gyroscope 22
4.4 Factory calibration 22
5 Component operation, reset and power-up 22
5.1 Component operation 22
5.2 Start-up sequence 22
5.3 Start-up sequence optimizations 25
5.3.1 Optional settings 26
5.4 Component output options 26
5.5 Solutions for asynchronous clock domains 28
5.5.1 Interpolation 28
5.5.2 Decimation 29
5.5.3 SYNC input pin 30
5.5.4 Data Ready, DRY 31
5.5.5 Data counter 32
5.5.6 Frequency counter 32
5.5.7 Time stamp 32
5.6 Recommended reading procedure for sensor data 33
5.7 Diagnostics flags and status behavior 34
6 Component interfacing 35
6.1 Safe SPI 35
6.2 SPI frame structure 37
6.3 Multi-slave operation 38
6.4 SPI frame status bits 39
6.5 Cyclic redundancy check (CRC) 41
6.5.1 SPI48BF CRC 42
6.5.2 SPI32BF CRC 42
6.6 Operations 43
7 Register definition 44

7.1 Register map user guide 44
7.1.1 Value and address formats 44
7.1.2 Register map overview 45
7.2 Sensor data block 47
7.2.1 Example of angular rate data conversion 48
7.2.2 Example of acceleration data conversion 48
7.2.3 Example of temperature data conversion 49
7.3 Sensor status and counter block 50
7.3.1 Data counters 50
7.3.2 Frequency counter / timestamp 51
7.3.3 Status summary 51
7.3.4 Saturation status summary 52
7.3.5 Common status 52
7.3.6 Gyroscope common status 53
7.3.7 Gyroscope status XYZ 53
7.3.8 Accelerometer status XYZ 54
7.3.9 Additional status registers 56
7.4 Sensor control block 57
7.4.1 Filter settings 58
7.4.2 Dynamic range and decimation 59
7.4.3 Saturation flag user control 60
7.4.4 User interface control 62
7.4.5 Self-test controls 63
7.4.6 Sensor mode control and soft reset 63
7.4.7 Whoami, traceability, identification, and spare registers 64
8 Application information 66
8.1 Application circuitry and external component characteristics 66
8.2 General application PCB layout 67
8.3 Assembly instructions 67

1 Introduction

This document contains essential technical information about the SCH16T series sensor including specifications, SPI interface descriptions, user-accessible register details, electrical properties, and application information. This document should be used as a reference when designing in the SCH16T series sensor.

2 Product and packing quantity information

Table 1 Murata offers products in different packing sizes and types

Product series	Part number	Description	Part number with packing mark	Packing type	Quantity
SCH16T	SCH16T-K30	6-DOF Gyroscope and Accelerometer with Digital SPI Interface, Gyroscope ±490 °/s, Accelerometer ±160 m/s² (XY) ±150 (Z)	SCH16T-K30-PCB	Sample package, Bulk	1 pc
			SCH16T-K30-004		4 pcs
			SCH16T-K30-1	Tape & Reel	100 pcs
			SCH16T-K30-10	Tape & Reel	1000 pcs

3 Specifications

3.1 Abbreviations

ACC	Accelerometer
ARS	Angular Rate Sensor (gyroscope)
ASIC	Application Specific Integrated Circuit
AEC-Q100	Automotive Electronics Council Failure Mechanism Based Stress Test Qualification For Integrated Circuits
CS	Chip Select
DOF	Degrees of Freedom
DPS	Degrees per Second
DRY	Data Ready
F_PRIM	Gyroscope Primary Frequency
FIFO	First In First Out
FREQ	Frequency
Gyro	Gyroscope
LPM	Low Power Mode
LPF	Low-Pass Filter
MCLK	Master Clock
MCU	Microcontroller Unit
MEMS	Micro-Electro-Mechanical System
MISO	Master In Slave Out
MOSI	Master Out Slave In
MSL3	Moisture Sensitivity Level 3 (Moisture and reflow preconditioning)
ODR	Output Data Rate
PD	Pull Down
POR	Power on Reset
PU	Pull Up
RT	Room Temperature 25 °C
SCK	Serial Clock
SPI	Serial Peripheral Interface
SYNC	Synchronization

3.2 General specifications

Table 2 General specifications

Parameter	Min	Nom	Max	Unit
Operating temperature [1]	-40		110	°C
Supply voltage	3.0	3.3	3.6	V
Digital I/O supply [2]	1.7		3.6	V
Total supply current	36	41	47	mA
Low power mode current consumption			10	mA
Gyro primary frequency, F_PRIM	22.1	23.6	25.1	kHz
Output update rate (ODR) - Interpolated outputs (F_PRIM X 16)	353.6	377.6	401.6	kHz
Output update rate (ODR) - Decimated outputs		23.6/X [3]		kHz
Component master clock, MCLK		1024 x F_PRIM		kHz
Turn on time [4]			250	ms
Weight		0.612		gram
Threshold of Power On Reset (POR) POR_TH_H/L for supply voltage	2.4		2.9	V
Threshold of Power On Reset (POR) POR_TH_H/L for digital I/O supply voltage	1.2		1.55	V
POR hysteresis window, difference between POR levels when voltage drops or rises. Applies for both supply and digital I/O supply voltage	0.125		0.3	V

1) Specifications are valid within the temperature range
2) Can exceed supply voltage
3) Decimation ratio X is selectable from the following options: 2, 4, 8, 16 and 32
4) After voltage supplies are within specification

3.3 Absolute maximum ratings

Murata guarantees sensor operation without parameter related damage or functional deviation within these maximum ratings. However, output values are specified only for conditions specified in the chapters *Gyroscope performance specifications* and *Accelerometer performance specifications.* All voltages are related to the potential at GND.

Table 3 Absolute maximum ratings

Parameter	Remark	Min	Nom	Max	Unit
Supply voltage	Supply voltage (pins V3P3, VDDIO)	-0.3		3.63	V
Storage temperature	No damage to the component will occur up to max 24 hours within these maximum ratings	-50		150	°C
Mechanical shock	t ≤ 0.5 ms, XYZ Axis. Tested according to AEC-Q100 requirements.	3000			g
Drop test	Drop to concrete surface, tested according to AEC-Q100 requirements.	1.2			m
ESD_HBM	ESD according to Human Body Model (HBM), Q100-002	2000			V
ESD_CDM center pins	Center pins ESD according to Charged Device Model (CDM), Q100-011	500			V
ESD_CDM corner pins	corner pins ESD according to Charged Device Model (CDM), Q100-011	750			V
Ultrasonic agitation	Cleaning, welding, etc.		Prohibited		

3.4 Gyroscope performance specifications

Table 4 Performance specifications are valid for all measurement axes, up to ±490 °/s measurement range on all outputs, supply voltage = 3.3 V and at 25 °C unless otherwise specified

Parameter	Condition	Min (-3 σ)	Typical	Max (+3 σ)	Unit
Dynamic range [A)]	Default sensitivity		±494.61		°/s
Offset [B)]	XY axis, -40 °C ... +110 °C	-0.3	±0.1	0.3	°/s
	Z axis, -40 °C ... +110 °C	-0.1	±0.01	0.1	
Offset drift over lifetime [C)]	After HTOL 500 h	-0.05		0.05	°/s
Offset drift velocity [D)]	-40 °C ... +85 °C, 0.5 K/min	-0.01		0.01	(°/s)/min
	-40 °C ... +85 °C, 5 K/min	-0.05		0.05	
Default sensitivity [E)]	Nominal value, 16-bit mode		66.25		LSB/(°/s)
	Nominal value, 20-bit mode		1060		
Sensitivity error [F)]	-40 °C ... +110 °C	-0.25	±0.05	0.25	%
Sensitivity error drift over lifetime [G)]	After HTOL 500 h	-0.2		0.2	%
Linearity error [H)]	±490 °/s, -40 °C ... +110 °C	-0.3	±0.15	0.3	°/s
	±100 °/s, -40 °C ... +110 °C	-0.04	±0.01	0.04	
Noise density	XY axis		0.0004	0.00045	(°/s)/√Hz
	Z axis		0.0006	0.00066	
Angle random walk [I)]	XY axis		0.015	0.019	°/√h
	Z axis		0.025	0.028	
Bias instability [J)]	Allan deviation minimum divided by 0.664		0.3	0.6	°/h
Cross-axis sensitivity [K)]	-40 °C ... +110 °C, orthogonality error between rate axes	-0.15		0.15	%
	-40 °C ... +110 °C, absolute to package reference	-1		1	
G-sensitivity [L)]	For constant gravity input	-0.00075		0.00075	(°/s)/g

Notes:

- Specified Min/Max values contain ±3 sigma variation limits of original test population. Typical values are validation population mean (unless otherwise specified). Min/Max and typical values are not guaranteed, values represent validation population characteristics.
- Specification is valid after 24 hours from reflow.
- Each system design including SCH16T series component must be evaluated by the customer in advance to guarantee proper functionality during operation.

Table 5 Gyroscope parameter definitions

Symbol	Description
A)	Measurement range is the rotation speed range where the performance specifications are valid. Dynamic range is the sensor output range where the output is not saturated. Output saturation is indicated by saturation flags documented in chapter *7.3.4 Saturation status summary*. Dynamic and measurement ranges are affected by user configurable sensitivity settings.
B)	Offset is the sensor output deviation from zero at zero rate and acceleration. Offset over temperature is determined over one temperature sweep in the specified temperature range.
C)	Offset drift over lifetime is estimated from offset drift from initial offset before MSL3 treatment to offset after 1000 hours of high temperature operating life (HTOL) test at 125 °C and maximum supply voltages.
D)	Offset drift velocity is the change rate of the zero-rate offset for predefined temperature gradients within a specified temperature range.
E)	Default sensitivity used in factory calibration. Sensitivity is affected by user configurable sensitivity settings defined in chapter *7.4.2 Dynamic range and decimation* $\text{Sensitivity} = \frac{\text{AR}_{\text{meas}}(\Omega_{\text{max}}) - \text{AR}_{\text{meas}}(\Omega_{\text{min}})}{\Omega_{\text{max}} - \Omega_{\text{min}}}$ Where: Ω_{max} = applied angular rate at 100 °/s Ω_{min} = applied angular rate at -100 °/s $AR_{meas}(\Omega_n)$ = measured angular rate at Ω_n [LSB] Sensor outputs data in 2's complement format.
F)	$\text{Sensitivity error} = \frac{\text{Sensitivity} - \text{nominal sensitivity}}{\text{nominal sensitivity}} \times 100\ \%$ Sensitivity error over temperature is determined over one temperature sweep in specified temperature range.
G)	Sensitivity error drift over lifetime is estimated from sensitivity drift during 1000 hours of high temperature operating life (HTOL) test at 125 °C and maximum supply voltages. Drift in percentage points.
H)	Linearity error is the maximum deviation from the best fit straight line defined by the measured values at the specified range end points. Best fit linear model uses a least-squares linear fit.
I)	Angle random walk is the white noise term estimated from Allan deviation at tau = 1 s.
J)	Bias instability is the Allan deviation minimum divided by 0.664. Measured with 13 Hz low pass filter setting, 200 Hz sample rate and fifteen-minute stabilization time before data collection starts to permit full thermal stabilization.
K)	Cross-axis sensitivity is the sensitivity on axes other than the intended axis of rotation. $\text{Cross} - \text{axis sensitivity} = \frac{\text{AR}_{\text{meas}}}{\Omega_{other}} \times 100\ \%$ Where: Ω_{other} = applied angular rate along an axis other than the measured axis AR_{meas}= the measured angular rate Murata calibrates gyroscope and accelerometer axes at component calibration line and therefore orthogonality error is the residual cross-axis error after system level orientation against fixed acceleration (gravity).
L)	Angular rate offset sensitivity in respect to orientation in the earth gravitation. This value is only measured from orientations that are not affected by the earth's rotation (0.004 °/s) and therefore, is not verified in all orientations. Can not be extrapolated beyond gravitation.

3.5 Accelerometer performance specifications

Table 6 Performance specifications are valid for all measurement axes, up to ±160 m/s^2 (XY) ±150 m/s^2 (Z) measurement range on all outputs (default and auxiliary), supply voltage = 3.3 V and at 25 °C unless otherwise specified

Parameter	Condition	Min (-3 σ)	Typical	Max (+3 σ)	Unit
Dynamic range [A)]	XY axis, constant acceleration	±260			m/s^2
	Z axis, constant acceleration	±150			
	All axis, @1000 Hz		1800		
Offset [B)]	-40 °C ... +110 °C, zeroed drift from 25 °C	-0.04	±0.01	0.04	m/s^2
	-40 °C ... +110 °C	-0.06	±0.02	0.06	
Offset drift over lifetime [C)]	After HTOL 500 h	-0.02		0.02	m/s^2
Offset drift velocity [D)]	-40 °C ... +110 °C, 0.5 K/min	-0.002		0.002	(m/s^2)/min
	-40 °C ... +110 °C, 5 K/min	-0.005		0.005	
Default sensitivity [E)]	Nominal value, 16-bit mode		200		LSB/(m/s^2)
	Nominal value, 20-bit mode		3200		
Default sensitivity for auxiliary accelerometer output [E)]	Nominal value, 16-bit mode		100		LSB/(m/s^2)
	Nominal value, 20-bit mode		1600		
Sensitivity error [F)]	-40 °C ... +110 °C	-0.1	±0.05	0.1	%
Sensitivity error drift over lifetime [G)]	After HTOL 500 h	-0.03		0.03	%
Linearity error [H)]	XY axis, ±160 m/s^2	-0.5	±0.1	0.5	m/s^2
	Z axis, ±150 m/s^2	-2	±0.5	2	
	±80 m/s^2, -40 °C ... +110 °C	-0.08	±0.01	0.08	
	±10 m/s^2, -40 °C ... +110 °C	-0.01	±0.005	0.01	
Noise density			0.8		(mm/s^2)/$\sqrt{Hz}$
Velocity random walk [I)]			30		(mm/s)/$\sqrt{h}$
Bias instability [J)]	Allan deviation minimum divided by 0.664		0.15	0.3	mm/s^2
Cross-axis sensitivity [K)]	-40 °C ... +110 °C, orthogonality error between ACC axes	-0.15		0.15	%
	-40 °C ... +110 °C, absolute to package reference	-1		1	

Notes:

- Specified Min/Max values contain ±3 sigma variation limits of original test population. Typical values are validation population mean (unless otherwise specified). Min/Max and typical values are not guaranteed, values represent validation population characteristics.
- Specification is valid after 24 hours from reflow.
- Each system design including SCH16T series component must be evaluated by the customer in advance to guarantee proper functionality during operation.
- A factor of 102 can be used when converting m/s^2 to milli-g. Actual gravity depends on sensor location on Earth.

Table 7 Accelerometer parameter definitions

Symbol	Description
A)	Measurement range is the acceleration range where the performance specifications are valid. Dynamic range is the sensor output range where the output is not saturated. Output saturation is indicated by saturation flags documented in chapter *7.3.4 Saturation status summary*. Dynamic and measurement ranges are affected by user configurable sensitivity settings.
B)	Offset is the sensor output deviation from zero at zero rate and acceleration. Offset over temperature is determined over one temperature sweep in the specified temperature range. $\text{Offset} = \frac{\text{ACC}_{\text{meas}}(a_{+1g}) + \text{ACC}_{\text{meas}}(a_{-1g})}{2}$ a_{+1g} = applied acceleration at +1 g (i.e., +1 g gravity of manufacturing location) a_{-1g} = applied acceleration at -1 g (i.e., -1 g gravity of manufacturing location) $\text{ACC}_{\text{meas}}(a_n)$ = measured acceleration at a_n [m/s^2]
C)	Offset drift over lifetime is estimated from offset drift from initial offset before MSL3 treatment to offset after 1000 hours of high temperature operating life (HTOL) test at 125 °C and maximum supply voltages.
D)	Offset drift velocity is the change rate of the zero-acceleration offset for predefined temperature gradients within a specified temperature range.
E)	Default sensitivity used in factory calibration. Sensitivity is affected by user configurable sensitivity settings defined in chapter *7.4.2 Dynamic range and decimation* $\text{Sensitivity} = \frac{\text{ACC}_{\text{meas}}(a_{+1g}) - \text{ACC}_{\text{meas}}(a_{-1g})}{a_{+1g} - a_{-1g}}$ a_{+1g} = applied acceleration at +1 g (i.e., +1 g gravity of manufacturing location) a_{-1g} = applied acceleration at -1 g (i.e., -1 g gravity of manufacturing location) $\text{ACC}_{\text{meas}}(a_n)$ = measured acceleration at a_n [LSB] Sensor outputs data in 2's complement format.
F)	$\text{Sensitivity error} = \frac{\text{Sensitivity} - \text{nominal sensitivity}}{\text{nominal sensitivity}} \times 100\ \%$ Sensitivity error over temperature is determined over one temperature sweep in specified temperature range.
G)	Sensitivity error drift over lifetime is estimated from sensitivity drift during 500 hours of high temperature operating life (HTOL) test at 125 °C and maximum supply voltages. Drift in percentage points.
H)	Linearity error is the maximum deviation from the best fit straight line defined by the measured values at the specified range end points. Best fit linear model uses a least-squares linear fit.
I)	Velocity random walk is the white noise term estimated from Allan deviation at tau = 1 s.
J)	Bias instability is the Allan deviation minimum divided by 0.664. Measured with 13 Hz low pass filter setting, 200 Hz sample rate and fifteen-minute stabilization time before data collection starts to permit full thermal stabilization.
K)	Cross-axis sensitivity is the sensitivity on axes other than the intended axis of acceleration. $\text{Cross} - \text{axis sensitivity} = \frac{\text{ACC}_{\text{meas}}}{a_{other}} \times 100\ \%$ Where: a_{other} = applied acceleration along an axis other than the measured axis ACC_{meas}= the measured acceleration Murata calibrates gyroscope and accelerometer axes at component calibration line and therefore orthogonality error is the residual cross-axis error after system level orientation against fixed acceleration (gravity).

3.6 Gyroscope typical performance characteristics

X-Axis	Y-Axis	Z-Axis

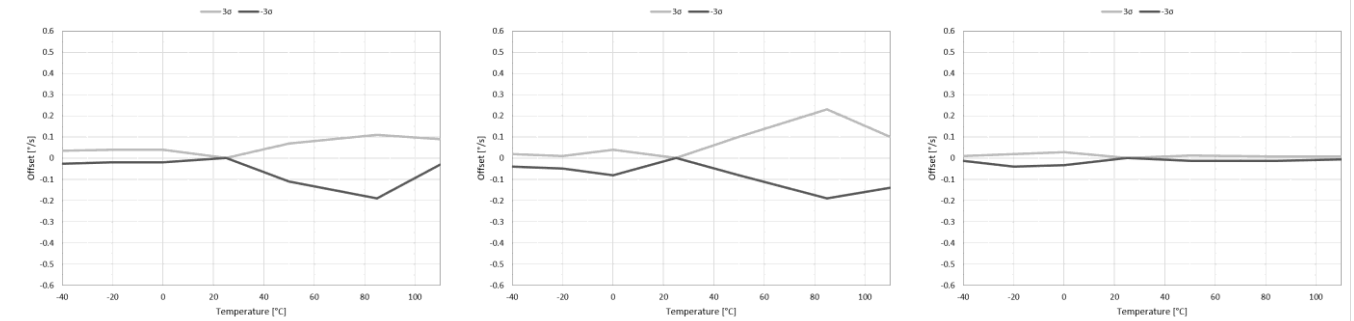

Offset drift from 25 °C (°/s) 3 σ population limits

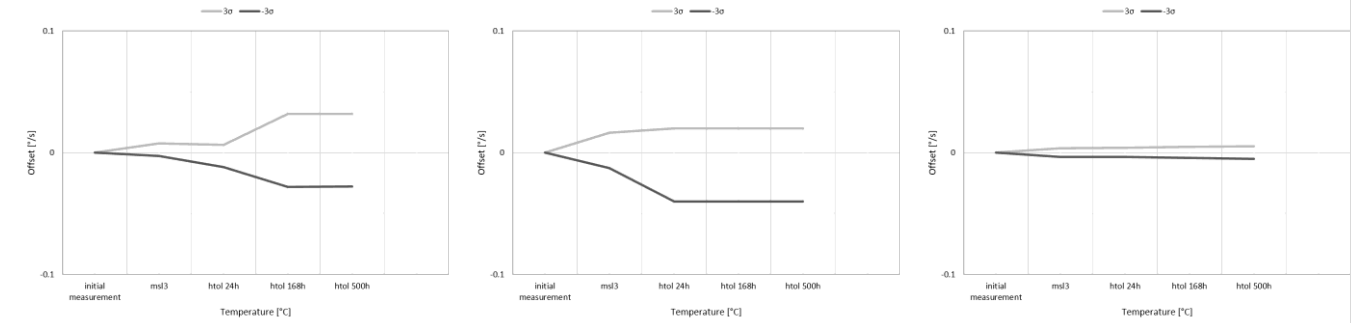

Offset drift over lifetime (HTOL 500 h) (°/s) 3 σ population limits (25 °C)

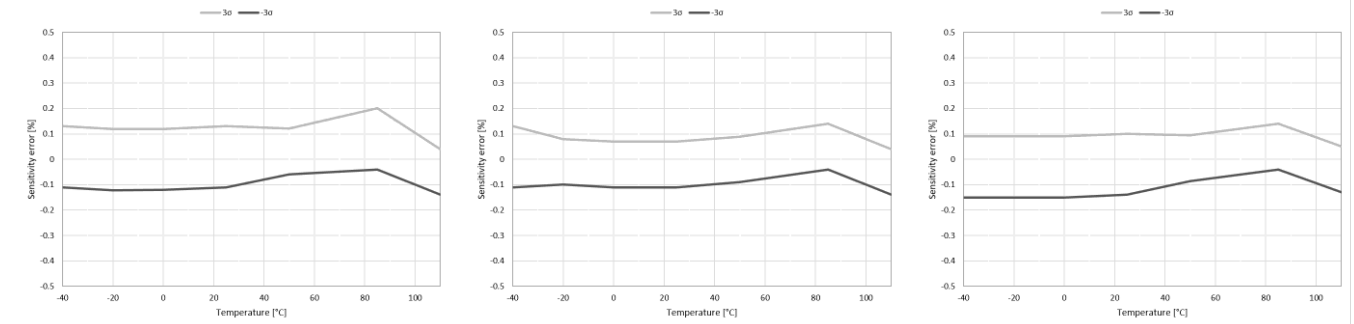

Sensitivity error (%) 3 σ population limits

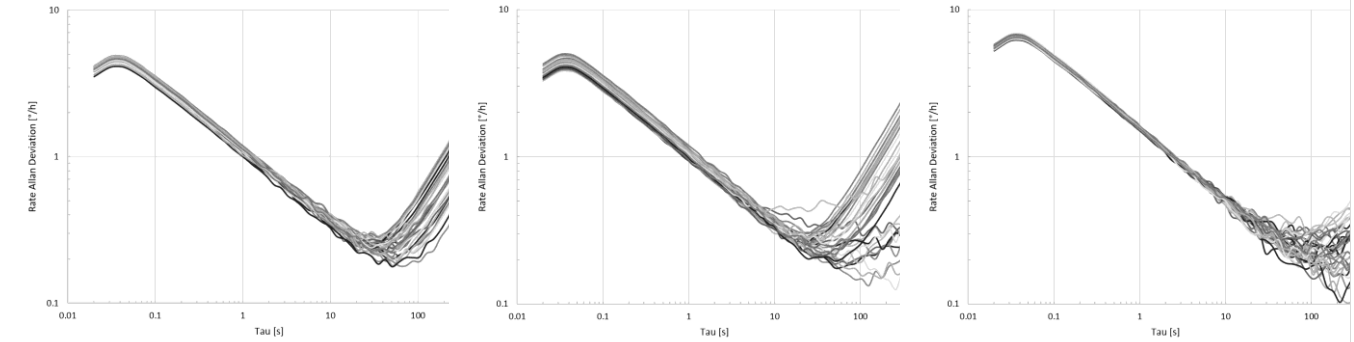

Allan Deviation (°/h)

3.7 Accelerometer typical performance characteristics

X-Axis	Y-Axis	Z-Axis

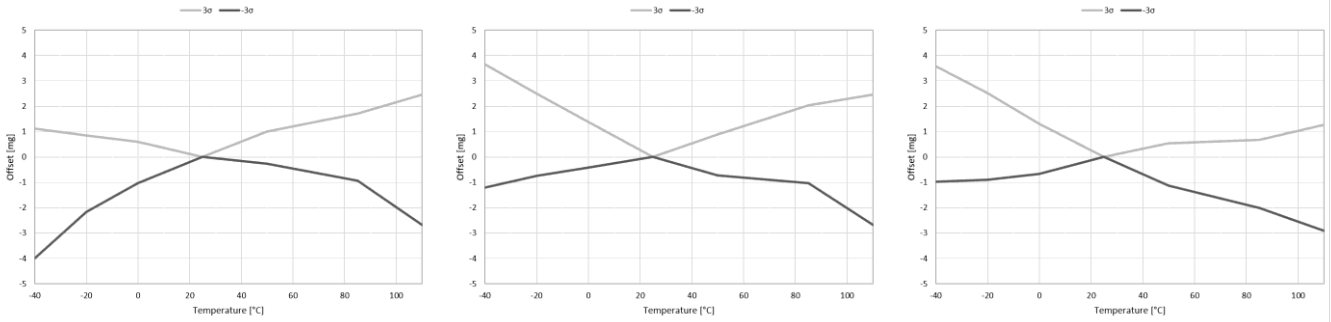

Offset drift from 25 °C (mg) 3 σ population limits

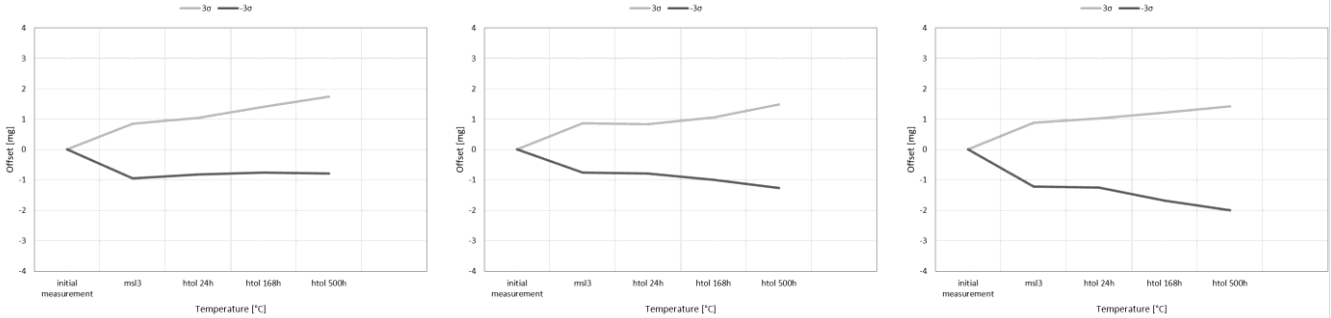

Offset drift over lifetime (HTOL 500 h) (mg) 3 σ population limits

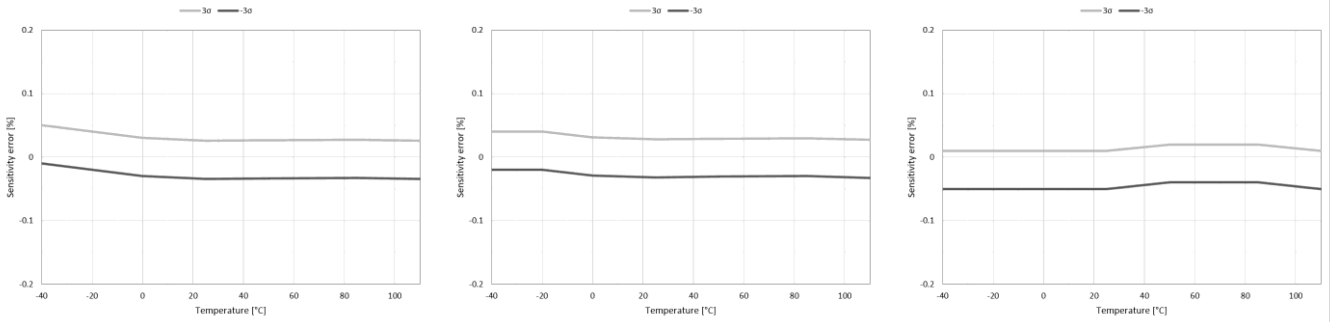

Sensitivity error (%) 3 σ population limits

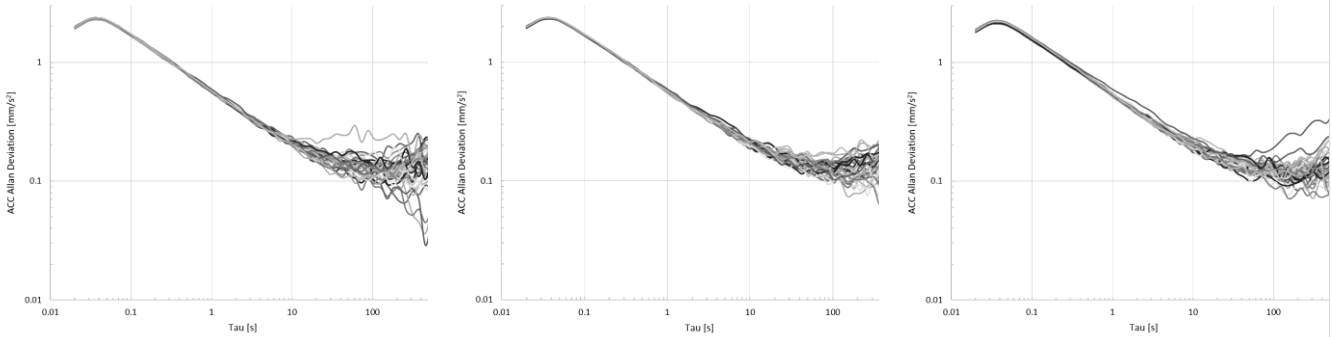

Allan Deviation (mm/s^2)

3.8 Temperature sensor performance specifications

Table 8 Temperature sensor performance specification

Parameter	Min	Nom	Max	Unit
Measurement range	-50		135	°C
Temperature signal sensitivity		100		LSB/°C
Total error	-15		15	°C
Linearity	-1		1	°C

Temperature is converted to °C with following equation:

Temperature [°C] = TEMP / 100, where TEMP is temperature sensor output register content in 2's complement format.

3.9 Gyroscope and accelerometer frequency response and filter characteristics

Table 9 SCH16T-K30 component low pass filter characteristics. Empty columns are not defined. Group delay is the derivate of the phase in respect to frequency, measured at 10Hz. Settling time is the time for the signal to settle within ±0.1% of input signal. Bypass (LPF7) mode realizes the full bandwidth of the MEMS and therefore requires special reading rate considerations according to chapter 5.6 Recommended reading procedure for sensor data.

Filter	Axis	Title	Type	Order	Min	Nom	Max	Unit
LPF0	Gyroscope	Cut-off frequency (-3 dB)	Butterworth	4	63.5	68	72.5	Hz
		Group Delay				7	10	ms
		Settling time				10	20	ms
	Accelerometer	Cut-off frequency (-3 dB)	Butterworth	4	60	68	73	Hz
		Group Delay				7	10	ms
		Settling time						ms
LPF1	Gyroscope	Cut-off Frequency (-3 dB)	Butterworth	4	28	30	32	Hz
		Group Delay				14	22	ms
		Settling time				25	40	ms
	Accelerometer	Cut-off Frequency (-3 dB)	Butterworth	4	28	30	32	Hz
		Group Delay				14	16	ms
		Settling time						ms
LPF2	Gyroscope	Cut-off Frequency (-3 dB)	Butterworth	3	12.2	13	13.8	Hz
		Group Delay				25	35	ms
		Settling time				65	200	ms
	Accelerometer	Cut-off Frequency (-3 dB)	Butterworth	3	12	13	14	Hz
		Group Delay				32	35	ms
		Settling time						ms
LPF3	Gyroscope	Cut-off Frequency (-3 dB)	Bessel	4	262	280	300	Hz
		Group Delay				1.4	2.5	ms
		Settling time					5	ms
	Accelerometer	Cut-off Frequency (-3 dB)			85	230 (XY) 190 (Z)	275	Hz
		Group Delay					2.8	ms
		Settling time						ms
LPF4	Gyroscope	Cut-off Frequency (-3 dB)	Bessel	3	346	370	394	Hz
		Group Delay				1.1	2	ms
		Settling time						ms
	Accelerometer	Cut-off Frequency (-3 dB)			90	230 (XY) 190 (Z)	380	Hz
		Group Delay					2.4	ms
		Settling time						ms
LPF5	Gyroscope	Cut-off Frequency (-3 dB)	Bessel	3	220	235	250	Hz
		Group Delay				1.5	2.5	ms
		Settling time						ms
	Accelerometer	Cut-off Frequency (-3 dB)			85	210 (XY) 190 (Z)	235	Hz
		Group Delay					2.9	ms
		Settling time						ms

Filter	Axis	Title	Type	Order	Min	Nom	Max	Unit
LPF7	Gyroscope	Cut-off Frequency (-3 dB)				Bypass		Hz
		Group Delay						ms
		Settling time					0.78	ms
	Accelerometer	Cut-off Frequency (-3 dB)			150	230 (XY) 190 (Z)	350	Hz
		Group Delay						ms
		Settling time						ms

3.10 Pin description

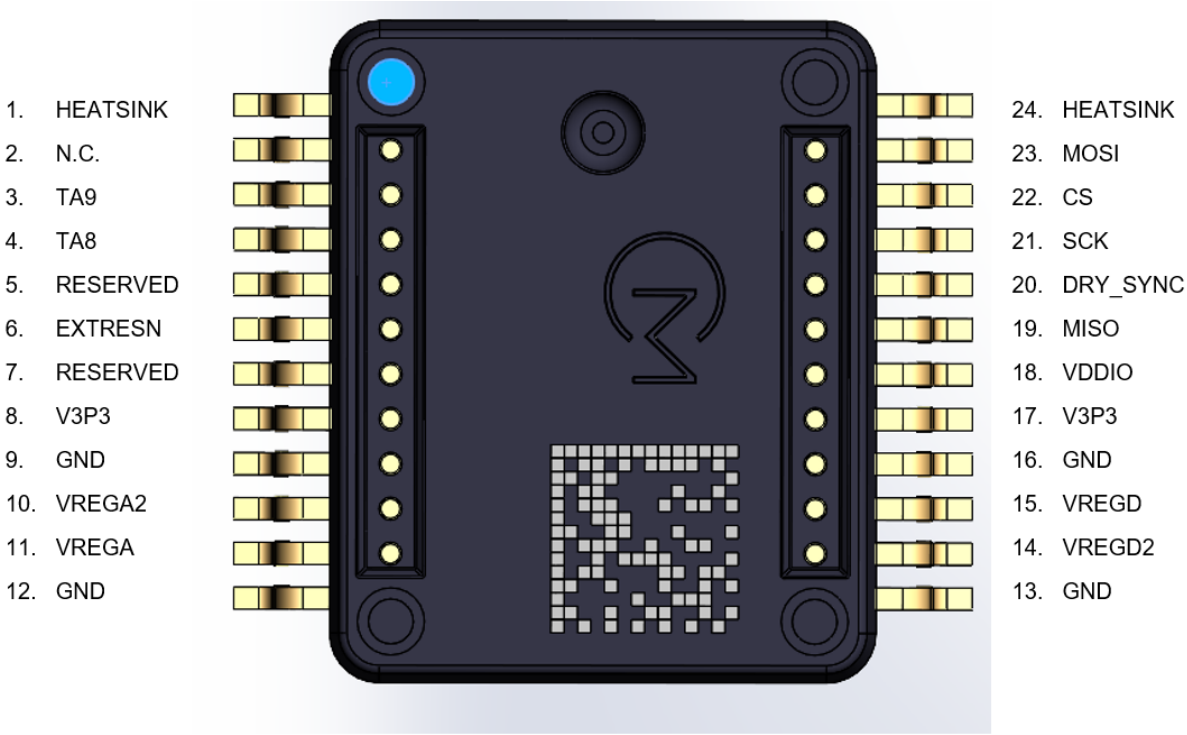

Figure 1 SCH16T series pin layout

Table 10 SCH16T series pin description

Pin #	Name	Description	Type	Voltage level	Default state/structure
1	HEATSINK	Heatsink connection	GND	0 V	
2	Reserved	Leave floating	N/A		
3	TA9	SPI device selection Address 1 (static). Slave addressing in SafeSPI2. Max four slaves can be addresses by TA9:8. TA on the slave is defined by VDDIO logic level at pins TA9 and TA8. Connect to ground for default '0' address.	DIN	0 V	0/PDR[1)]
4	TA8	SPI device selection Address 0 (static). Slave addressing in SafeSPI2. Max four slaves can be addresses by TA9:8. TA on the slave is defined by VDDIO logic level at pins TA9 and TA8. Connect to ground for default '0' address.	DIN	0 V	0/PDR[1)]

Pin #	Name	Description	Type	Voltage level	Default state/structure
5	Reserved	Connect to GND	N/A		
6	EXTRESN	External reset input (low active) during normal operation.	DIN/AIN	VDDIO	1/PUR[1)]
7	Reserved	Connect to GND	N/A		
8	V3P3	External unregulated inputs for the core supply regulators	SUPPLY	3.3 V	
9	GND	Ground	GND	0 V	
10	VREGA2	Regulated core voltage for the analog circuitry. External capacitor connection for positive reference/supply voltage. Connected in PCB.	AIN	2.5 V	
11	VREGA	Regulated core voltage for the analog circuitry. External capacitor connection for positive reference/supply voltage. Connected in PCB.	AOUT	2.5 V	
12	GND	Ground	GND	0 V	
13	GND	Ground	GND	0 V	
14	VREGD2	Regulated core voltage for the digital circuitry. External capacitor connection for positive reference/supply voltage. Connected in PCB.	AIN	1.5 V	
15	VREGD	Regulated core voltage for the digital circuitry. External capacitor connection for positive reference/supply voltage. Connected in PCB.	AOUT	1.5 V	
16	GND	Ground	GND	0 V	
17	V3P3	External unregulated inputs for the core supply regulators	SUPPLY	3.3 V	
18	VDDIO	Digital supply I/O	SUPPLY	3.3 V (option: 1.8 V or 2.5 V)	
19	MISO	Master In Slave Out (SPI)	DOUT	VDDIO	TRI
20	DRY_SYNC	SYNC input (active high) DRY (Data Ready) outputs an interrupt signal when the internal output registers (decimated gyroscope and accelerometer) have been updated until the first decimated register is read.	DIN/DOUT	VDDIO	0/PDR
21	SCK	Serial Clock (SPI)	DIN	VDDIO	0/PDR
22	CS	Chip Select (SPI)	DIN	VDDIO	1/PUR
23	MOSI	Master Out Slave In (SPI)	DIN	VDDIO	0/PDR
24	HEATSINK	Heatsink connection	GND	0 V	

1) Strong PD/PU resistance during device supply POR reset state, otherwise weak PD/PU.

3.11 Digital I/O specification

Table 11 SPI DC characteristics describes DC characteristics of the SCH16T series SPI I/O pins. Current flowing into the circuit has a positive value.

Table 11 SPI DC characteristics.

Title	Symbol	Min	Max	Unit
SPI voltage level	VIO	1.7	3.6	V
Input high voltage	VIH	0.7*VIO	VIO	V
Input low voltage	VIL	0	0.3*VIO	V
Input voltage hysteresis	VHYST	0.05*VIO		V
Input/output capacitance	CIO		10	pF
Total MISO load capacitance [1], <Wide> range	CLWIDE	10	100	pF
Input pull-down resistance, strong (default)	RPD	60	140	kOhm
Input pull-up resistance, strong (default)	RPU	60	140	kOhm
Input pull-down/pull-up resistance, weak (option)	RPD/RPU	200	400	kOhm
Output leakage current in case MISO is in high impedance (tri-state) condition	ILEAK	-10	10	µA

1) For maximum supported MISO capacitance see SPI AC specifications

3.12 SPI AC characteristics

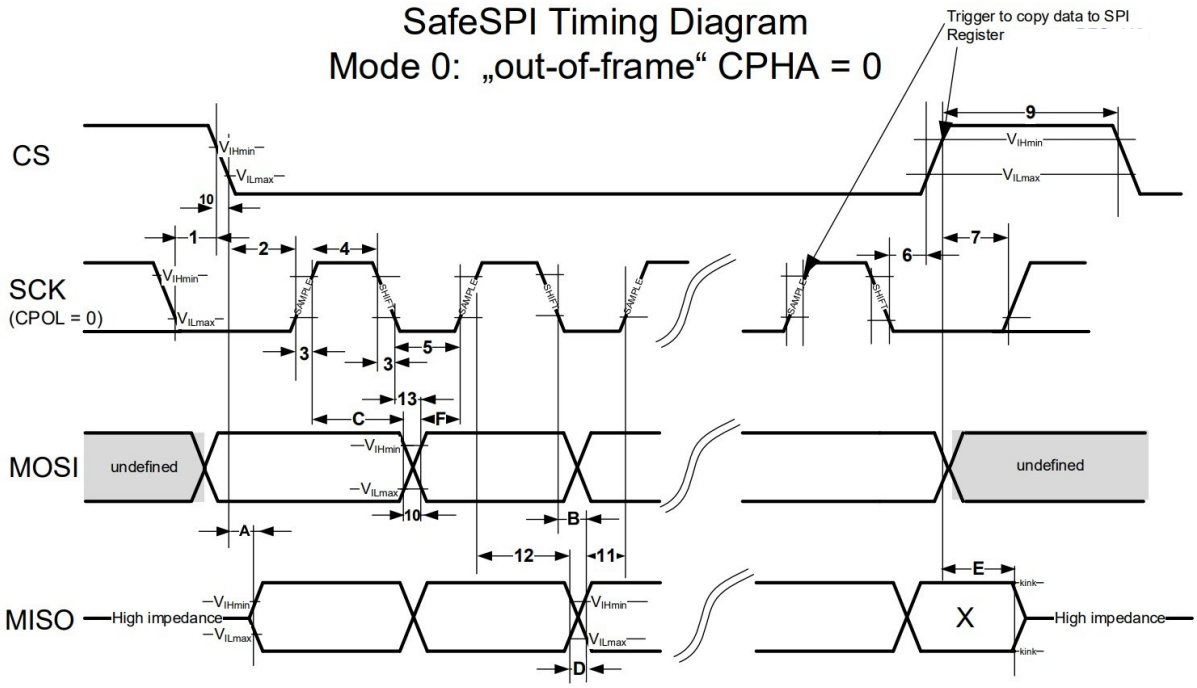

Figure 2 Timing diagram of SPI communication (SPI mode 0), CPOL = 0, CPHA = 0

Table 12 SPI AC electrical characteristics. Default mode is MISO_HI_SPD = 0. If MISO_HI_SPD = 1 setting is used it must be set up first after startup.

Title	Remark	Symbol	MISO_HI_SPD = 0 (Default)		MISO_HI_SPD = 1		Unit
			Min	Max	Min	Max	
SCK operating frequency			0.095	10.5	0.095	25.5	MHz
MISO data valid time (CS)	Time delay from the falling edge of CS to data valid at MISO	A		40		17	ns
MISO data valid time (SCK)	Time delay from the falling edge of SCK to data valid at MISO	B		32		14	ns
MOSI data hold time	Hold time of MOSI after rising edge of SCK	C	20		8		ns
MISO rise and fall time	MISO rise and fall time is not defined during transition between high impedance and active mode (MISO load max 200 pF)	D	2	10	NA	NA	ns
MISO rise and fall time	MISO rise and fall time is not defined during transition between high impedance and active mode (MISO load max 100 pF)	D	2	9	0.3	5	ns
MISO rise and fall time	MISO rise and fall time is not defined during transition between high impedance and active mode (MISO load max 50 pF)	D	2	9	0.3	4	ns
MISO data disable lag time	Time between the rising edge of CS to MISO in Tri-state	E		50		21	ns
MOSI data setup time	Setup time of MOSI before the rising edge of SCK	F	10		4		ns
SCK disable lead time	Time between the falling edge of SCK and the falling edge of CS	1	10		10		ns
SCK enable lead time	Time between the falling edge of CS and the rising edge of SCK	2	40		17		ns
SCK rise and fall time	Rise and fall time of SCK signals	3		9		3.5	
SCK high time	Duration of logical high level at SCK	4	37		16		ns
SCK low time	Duration of logical low level at SCK	5	37		16		ns
SCK enable lag time	Time between the falling edge of SCK and the rising edge of CS	6	20		8		ns
SCK disable lag time	Time between the rising edge of CS and the rising edge of SCK	7	10		10		ns
Sequential transfer delay	In case of MOSI write commands (RW=1)	9	750		450		ns
Sequential transfer delay	In case of MOSI read commands (RW=0)	9	450		450		ns
MOSI rise and fall time	Rise and fall time of MOSI signals	10		9		3.5	ns
MISO data setup time	Setup time of MISO before the rising edge of SCK	11	5		2		ns
MISO data hold time	Hold time of MISO after rising edge of SCK	12	X[1)]		X[1)]		ns
MOSI valid time	Valid time of MOSI after the falling edge of SCK	13		10		4	ns
CS rise and fall time	Rise and fall time of CS signals	10		9		3.5	ns

1) MISO data is guaranteed to be stable until the next SCK shift edge

3.13 Measurement axis and directions

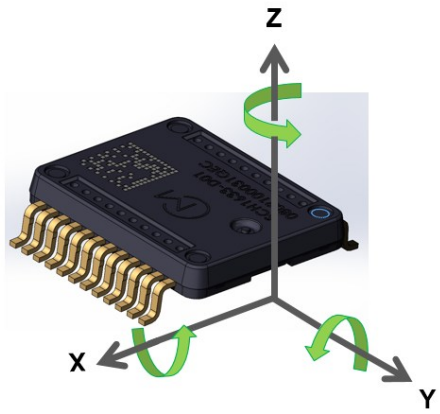

Figure 3 SCH16T series measurement directions for gyroscope and accelerometer. Output is showing positive value when component is moved in the direction of the arrow.

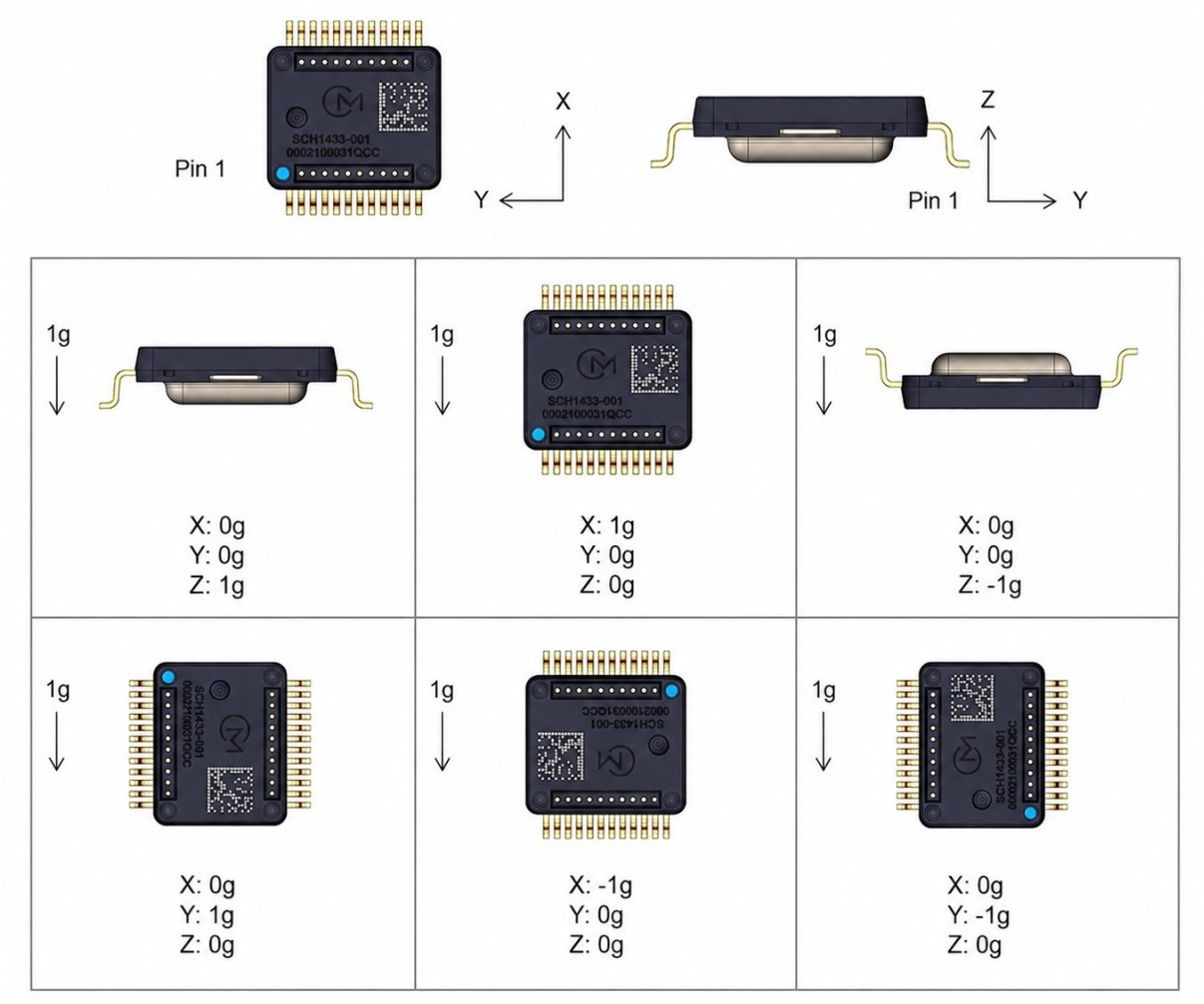

Figure 4 SCH16T series accelerometer measurement directions and outputs. 1 g indicates direction of gravity. Note: Pin 1 is marked in blue only in this data sheet to emphasize location.

3.14 Package outline and dimensions

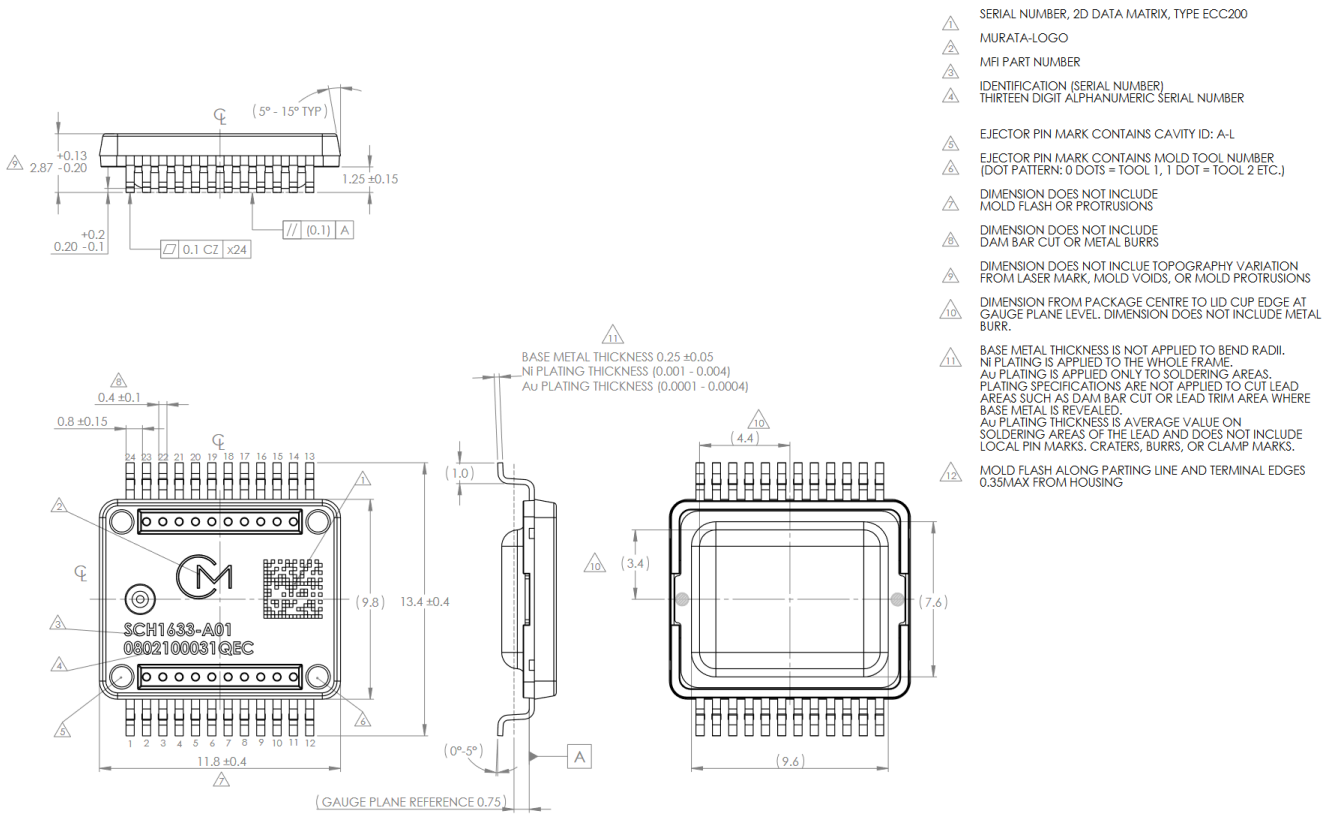

Figure 5 Outline of SOIC package. All dimensions are in millimeters. All angles are in degrees. Tolerances unless otherwise specified according to ISO2768-f. A sample part number for reference only. Shapes and dimensions of non-specified features are subject to change.

3.15 PCB footprint

SCH16T series PCB footprint dimensions are presented in the figure below.

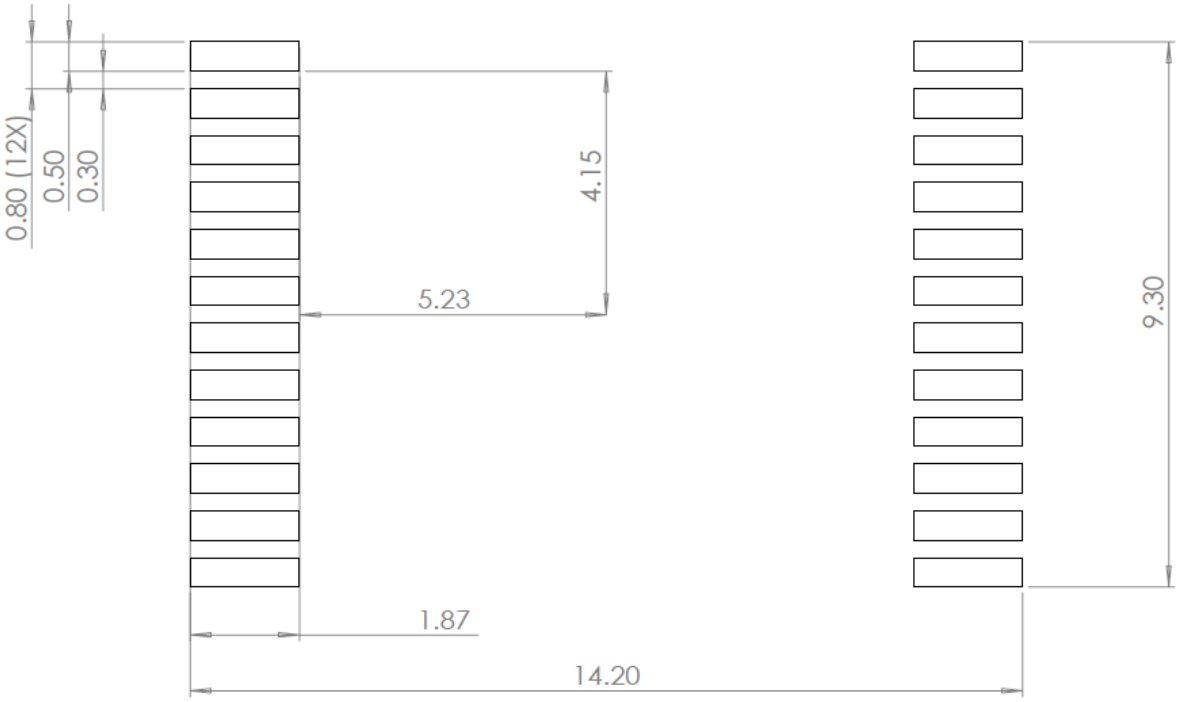

Figure 6 Recommended PCB pad layout for SCH16T series. All dimensions are in millimeters.

This is the end of the short data sheet. For full version of the data sheet and an assembly instructions document, please contact Murata.

Murata reserves all rights to modify this document without prior notice.

4 General product description

The SCH16T series consists of independent acceleration and angular rate sensing elements, and an Application-Specific Integrated Circuit (ASIC) used to sense and control those elements. The angular rate and acceleration sensing elements are manufactured using Murata's proprietary High Aspect Ratio (HAR) 3D-MEMS process, which enables making robust, extremely stable, and low noise capacitive sensors.

4.1 Component block diagram

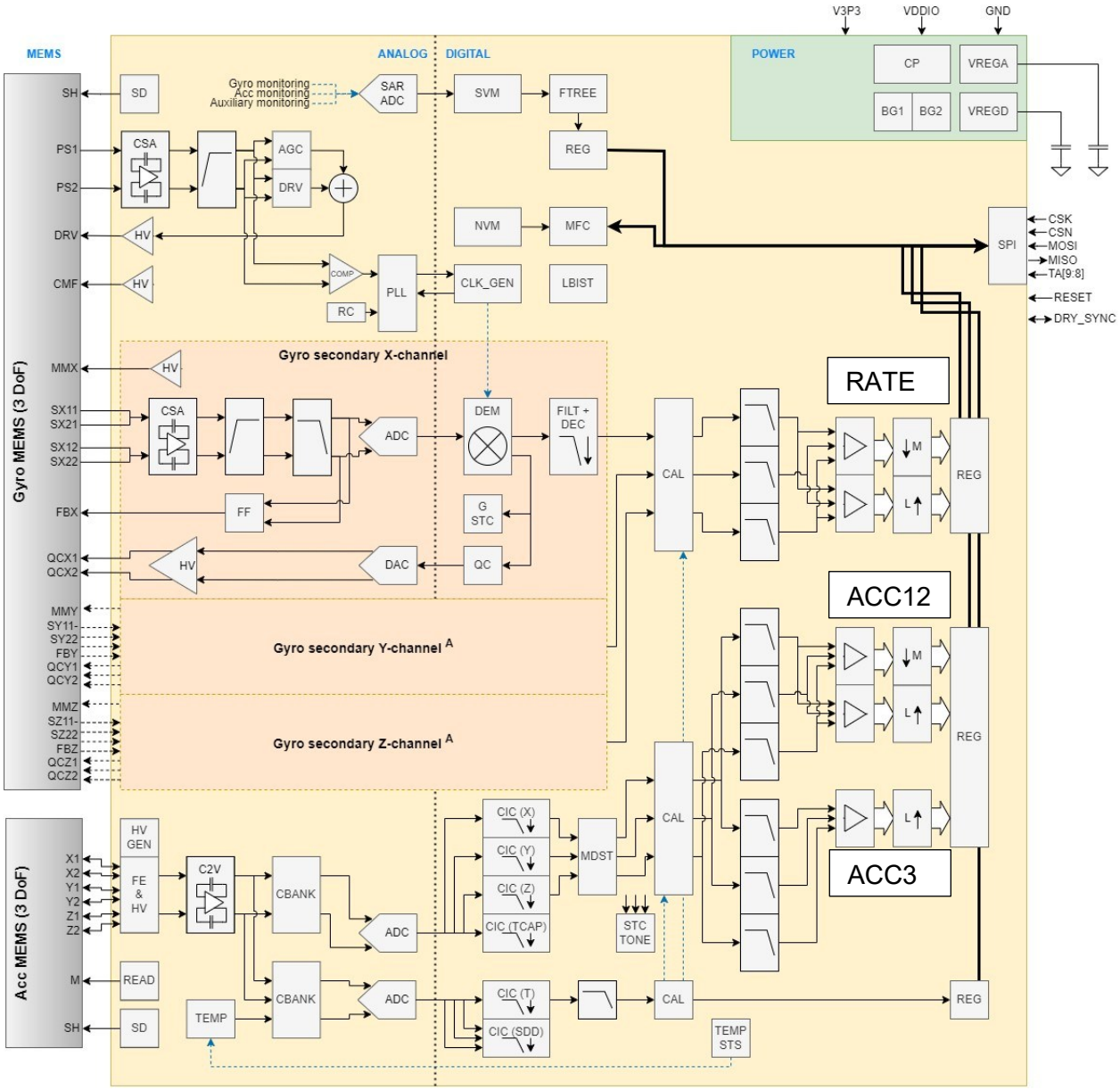

Figure 7 SCH16T series block diagram. Note [A]: gyro Y- and Z- channels are identical to X- channel.

4.2 Accelerometer

The acceleration sensing element consists of three acceleration-sensitive masses. Acceleration causes a capacitance change that is converted into a voltage change in the signal conditioning ASIC.

4.3 Gyroscope

The angular rate sensing element consists of moving masses that are intentionally exited to in-plane drive motion. Rotation in a sensitive direction causes in-plane (Z) or out-of-plane (XY) movement that can be measured as capacitance change with the signal conditioning ASIC.

4.4 Factory calibration

Sensors are factory calibrated and there is no need for separate calibration in most applications. Factory calibrated parameters include offset, sensitivity, internal fault monitoring signals and cross-axis sensitivity for gyroscope and accelerometer.

Sensors are calibrated over temperature in three measurement points at -40 °C, +25 °C, and +110 °C. Offset and sensitivity are calibrated with 2nd order polynomial and cross-axis with linear function. Calibration variables are stored in non-volatile memory during manufacturing and are read automatically during the start-up.

It is important to acknowledge that PCB assembly can introduce offset errors to the sensor output. If feasible, system-level offset calibration (zeroing) post-assembly is recommended.

5 Component operation, reset and power-up

5.1 Component operation

The SCH16T series has an internal power-on reset circuit. After release of EXTRESN and once the power supplies are within the specified range, the component reads configuration and calibration data from the non-volatile memory to volatile registers. After the memory is read, the sensor goes to low power mode and an external SPI command, EN_SENSOR, is needed to continue to the initialization phase and to start the measurement.

Start-up time is dependent on the low pass filter setting. After power-on or reset (release of EXTRESN or EN_SENSOR command) the sensor provides valid acceleration and angular rate data after the specified power-on start-up time.

SCH16T series LPF0 (68 Hz) low pass filter setting by default and the filter can be changed by SPI command. SCH16T series has extensive internal fault diagnostics to detect possible over range and internal failures. Diagnostic status can be monitored via status bits included in SPI frame and status registers.

5.2 Start-up sequence

The purpose of the start-up sequence is to guide the component to normal operation mode and verify that the functions (accelerometer, angular rate, and temperature) are working as intended. During this sequence, the component also performs tests to ensure that the monitoring circuits are operating normally. This is intended to prevent potential latent failures in the component due to malfunctions in the monitoring circuits.

The internal start-up tests will set various intended error flags in the sensor status registers. To clear these flags, it is necessary to read the status registers after the start-up sequence is complete. When reading the status registers, user must consider that the state of status flags is not defined during Low Power Mode (LPM) and during the 215 ms wait state after issuing an EN_SENSOR command. Once the start-up sequence is completed and the End of Initialization bit (EOI bit) has been set to '1', the SPI frame Return Status bits (S bits) indicate sensor operation status. Normal operation is indicated by an S status content of 0b00.

Requirements for the sensor start-up when supply voltage (V3P3) is turned on:

- SCK must be kept low (0) immediately after power on before SPI startup (32 ms after component startup)
- If VDDIO supply source is different compared to V3P3 supply source the VDDIO supply needs to be up within 2 ms of V3P3 turn on. VDDIO supply can be turned on before V3P3 without any time restrictions.
- SYNC pin must be in non-active state (SYNC_DRY = 0 or high-z)

Sensor restarts after external reset (EXTRESN) pin is released from reset state (from low to high), so if the above requirements cannot be met, then reset pin must be used and EXTRESN low to high transition must happen after the above conditions are met. Any SPI communication before sensor enters LPM mode is not allowed.

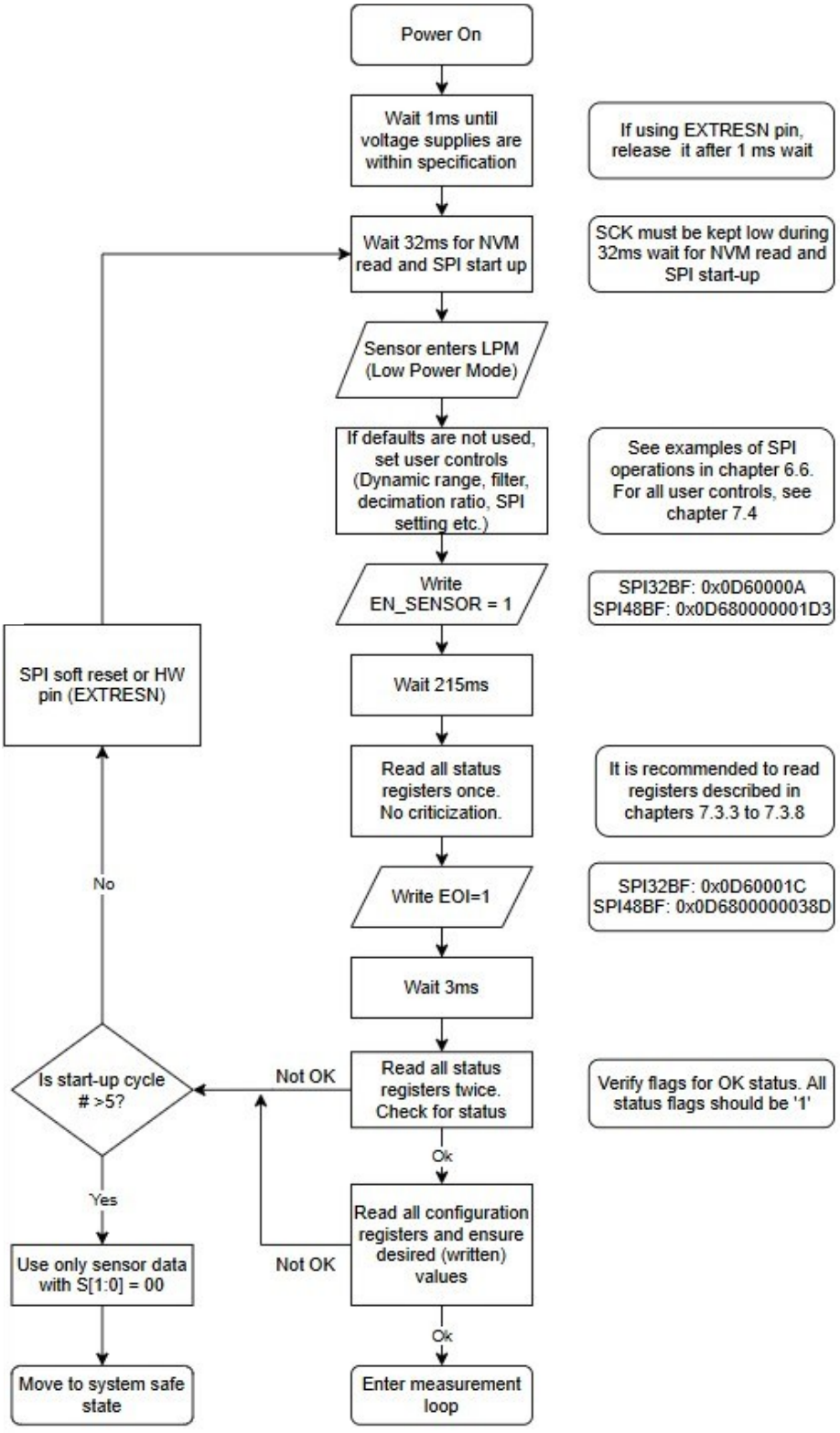

Figure 8 Example of SCH16T series start-up sequence. SPI soft reset is not reliable and not recommended

5.3 Start-up sequence optimizations

SCH16T series component can be started typically faster than 250 ms after power on and faster than 218 ms from low power mode. Normal start-up sequence includes 215 ms wait time that can be reduced by periodically checking if the startup has been completed successfully.

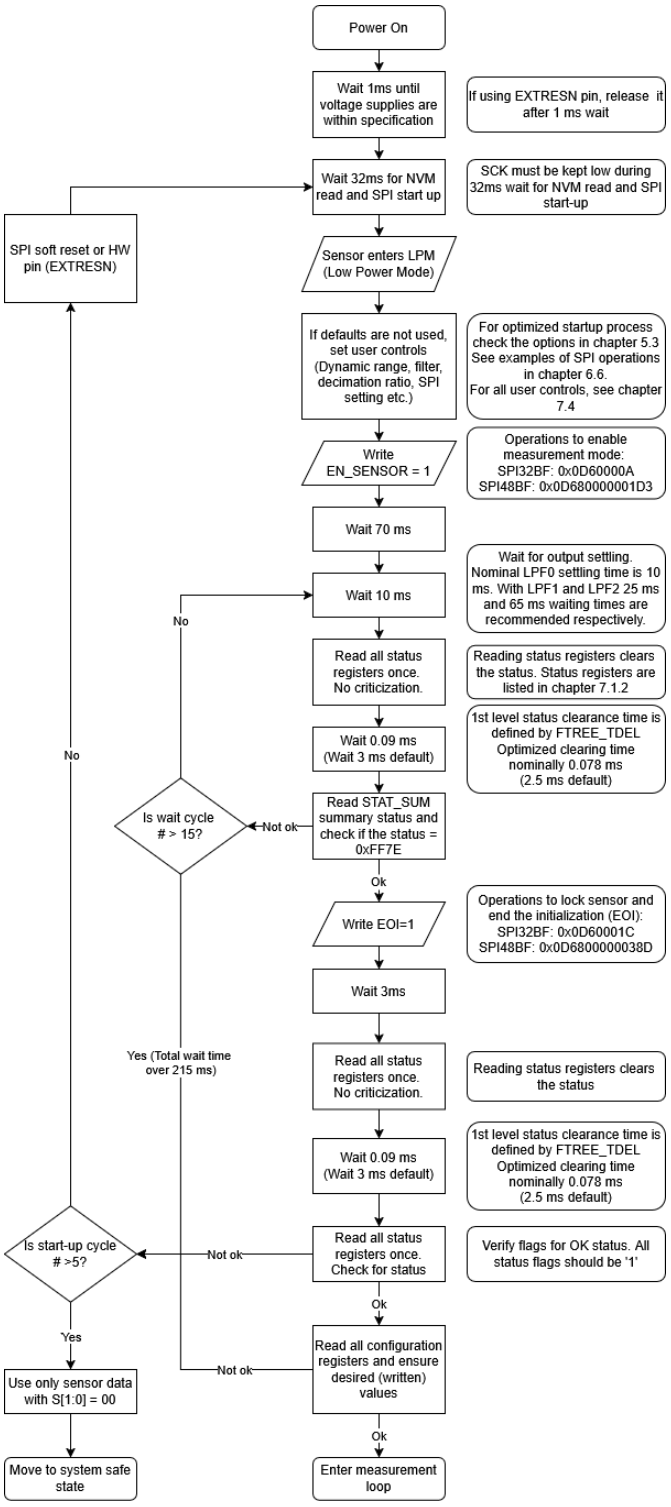

Figure 9 Example of SCH16T series start-up sequence with status checking

5.3.1 Optional settings

This chapter includes collection of settings that can improve sensor performance in edge cases. All setting changes must be applied during startup as EOI command locks the sensor settings.

Table 13 Option for 1st level status clearance time reduction in CTRL_USER_IF register. SPI frames to set the shortest clearing time: 48-bit frame 0CE800000C7B and 32-bit frame 0CE00064.

Bit name	Bit description	Bits	Reset value	Recommended value
FTREE_TDEL	Typical delay time of 1st level status clearance. When user reads data register, the associated 1st level status register is cleared after TDEL. 00 - 0.078 ms 01 - 0.625 ms 10 - 2.5 ms (default) 11 – 5 ms	[13:12]	2b10	2b00 (Shortest clearing time)

Table 14 Options for disabling sensor self-tests in CTRL_ST register. SPI frames to disable gyroscope continuous self-test and accelerometer start-up self-test: 48-bit frame 0D280001FA33 and 32-bit frame 0CE00FD7.

Bit name	Bit description	Bits	Reset value	Disabling value
RATE_STC_CTRL	Disable RATE_Z, RATE_Y and RATE_X continuous self-tests by writing bits to '000'	[11:9]	3b111	3b000 Optional setting for improving gyroscope noise performance with above 210 Hz low pass filters LPF3-7 (reduces self-test coverage)
ACC_STS_CTRL	Disable ACC start-up self-test by writing bit to '0'	[2:2]	1b1	1b0 Disabling accelerometer start-up self-test can make the start-up process more robust in harshly vibrating environments (reduces self-test coverage)

5.4 Component output options

The SCH16T component has several output options for the user to choose from. The component has two outputs for reading gyroscope data and a total of three outputs for reading acceleration data. Each output consists of separate X-, Y- and Z-axis output data registers and each output and axis have separate status flags. The first gyroscope data output RATE_XYZ1 has interpolation filter and the second RATE_XYZ2 has decimation filter. The first acceleration output ACC_XYZ1 has interpolation filter, second ACC_XYZ2 has decimation filter and the third output ACC_XYZ3 has also interpolation filter but with larger dynamic range compared to the first one. Interpolation and decimation are explained in more detail in the next chapter 5.5 Solutions for asynchronous clock domains.

The user may choose to utilize multiple outputs simultaneously and adjust output settings separately according to the users' needs. Dynamic range can be individually set for each output, but lowpass filter settings are shared between interpolated and decimated outputs. However, different filters can be applied between gyroscope, accelerometer, and auxiliary accelerometer X-, Y- and Z-axis if desired. The output options are presented in the table below.

Table 15 SCH16T series output options. Rounded dynamic range values.

Output	Description	Dynamic range configuration bits	Dynamic range options	Output axis	Low pass filter configuration bits	Low pass filter options
RATE_XYZ1	Interpolated gyroscope output	DYN_RATE_XYZ1	±490 °/s (default) ±245, ±122 °/s	RATE_X1	FILT_SEL_RATE_X	13, 30, 68 (default), 235, 280 and 370 Hz
				RATE_Y1	FILT_SEL_RATE_Y	
				RATE_Z1	FILT_SEL_RATE_Z	
RATE_XYZ2	Decimated gyroscope output	DYN_RATE_XYZ2		RATE_X2	FILT_SEL_RATE_X	
				RATE_Y2	FILT_SEL_RATE_Y	
				RATE_Z2	FILT_SEL_RATE_Z	
ACC_XYZ1	Interpolated accelerometer output	DYN_ACC_XYZ1	±164 (XY) 150 (Z) m/s^2 (default) ±82, ±41 and ±20.5 m/s^2	ACC_X1	FILT_SEL_ACC_X12	13, 30, 68 (default), 190 (Z), 210 (XY), 230 (XY)
				ACC_Y1	FILT_SEL_ACC_Y12	
				ACC_Z1	FILT_SEL_ACC_Z12	
ACC_XYZ2	Decimated accelerometer output	DYN_ACC_XYZ2		ACC_X2	FILT_SEL_ACC_X12	
				ACC_Y2	FILT_SEL_ACC_Y12	
				ACC_Z2	FILT_SEL_ACC_Z12	
ACC_XYZ3	Auxiliary interpolated accelerometer output	DYN_ACC_XYZ3	±260 (XY) 150 (Z) m/s^2 (default) ±82, ±41 and ±20.5 m/s^2	ACC_X3	FILT_SEL_ACC_X3	13, 30, 68 (default), 190 (Z), 210 (XY), 230 (XY)
				ACC_Y3	FILT_SEL_ACC_Y3	
				ACC_Z3	FILT_SEL_ACC_Z3	

5.5 Solutions for asynchronous clock domains

Several features have been introduced to enhance synchronization between the product's internal clock and the application system clock. Although most systems can typically handle standard continuous polling of the SPI peripheral, precise time-domain synchronization is crucial for certain high-performance applications. The table below outlines these synchronization features, while additional use-case examples and recommendations are provided in chapter 5.6 Recommended reading procedure for sensor data.

Table 16 Solutions for asynchronous clock domains

Feature	Use case	Value
Interpolation	This should be used by default. Interpolation is applied in outputs RATE_XYZ1, ACC_XYZ1, and ACC_XYZ3.	• Minimized sampling jitter. • Minimized timing difference reads. • No missing samples.
Decimation	This function averages the sample data rate down to 737.5 Hz segments. Decimation is applied in outputs RATE_XYZ2 and ACC_XYZ2	• Gives the host more time to read each sample. • Data is available over a longer time window that is helpful if host system sampling rate is inconsistent.
SYNC input	Special case. Recommended if there is a need to sync between multiple SCH16T series sensors or if sample time consistency is valued over jitter	• Synchronization between multiple sensors. • Data can be received with a consistent rate even if host system sampling rate is inconsistent.
DRY output (Data Ready Interrupt)	Special case. Recommended only if decimated, low update rate outputs RATE_XYZ2 and ACC_XYZ2 are used. Decimated outputs are typically used if MCU bandwidth is limited.	• Minimized sampling jitter. With decimated outputs, the maximum data jitter depends on the decimation ratio and interrupt use removes this jitter totally. • No missing samples. • Note that as the DRY frequency is generated from the component's internal clock (F_prim), any variation in the internal clock frequency will directly affect the DRY interval.
Data counter	Special case. Recommended only if Data Ready is not preferred in application.	• Data counter is index for the component data output values. The application can monitor that: • Data is updating. • Every wanted sample has been acquired. • The same sample has not been read twice.
Data counter with frequency counter	Special case. Recommended if integration operation is performed to sensor data and timing uncertainty or data jitter of the interpolated data do not fulfill the system accuracy requirements.	• Data counter together with frequency counter can be used for more accurate integration.

SYNC and DRY (Data Ready) are implemented on a single hardware pin. Therefore, simultaneous use of these functions is not possible. Controlling the behavior of SYNC and DRY is explained in chapters *5.5.3 SYNC input pin* and *5.5.4 Data Ready, DRY*.

5.5.1 Interpolation

The purpose of interpolation is to minimize time uncertainty (sampling jitter) by increasing artificially the internal sample rate. The natural output data rate of all data outputs is F_PRIM/2, which is 11.8 kHz with nominal primary frequency. This means that a time-uncertainty between sensor register update and system sampling time could be theoretically anything between 0...85 µs.

To minimize this jitter, a fixed interpolation factor of 32 is applied to outputs RATE_XYZ1, ACC_XYZ1, and ACC_XYZ3. With nominal primary frequency it corresponds to a 377.6 kHz refresh rate of register content.

The sample rate is increased by adding a one (1) cycle latency delay to the initial sample. The delay corresponds to the maximum time uncertainty which with nominal primary frequency is 85 µs. A linear interpolation is then applied between the initial sample and the new sample, and this interpolation is divided into time segments by the artificially increased update rate 32 x F_PRIM/2. Time uncertainty is now reduced to the length of this segment, which is max (85 µs)/32 = 2.6 µs (with nominal primary frequency).

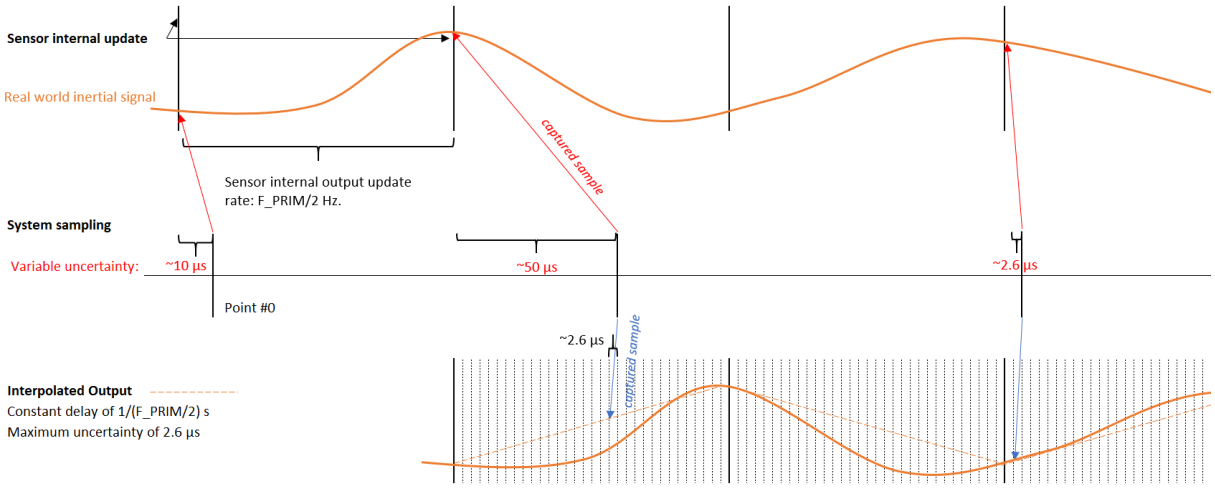

Figure 10 Interpolation (8 kHz system sampling rate is used in this illustration)

5.5.2 Decimation

Certain systems need to utilize every available sample and for example acquire samples from all axis at the same time instant. As the natural output data rate with nominal primary frequency is 11.8 kHz, this can create excessive load for the MCU. The purpose of decimation is to decrease the internal update rate to give the host system enough time to read same sample from all axis without the need of use of SYNC. The decimation is done by a non-recursive moving averager CIC decimation filter that uses F_PRIM/2 sample rate. Final decimated output is the average of all the samples that sensor has updated during the last decimated output cycle.

During start-up, the user can select a suitable decimation from the options presented in the table below. The selected decimation ratio is applied to outputs RATE_XYZ2 and ACC_XYZ2.

Table 17 Selectable decimation ratios and corresponding ODR

Decimation factor	Output data rate	Output data rate with nominal F_PRIM (kHz)	Data reading time with nominal F_PRIM (ms)
1	F_PRIM/2	11.8	0.085
2	F_PRIM/4	5.9	0.17
4	F_PRIM/8	2.95	0.34
8	F_PRIM/16	1.475	0.68
16	F_PRIM/32	0.7375	1.36

Drawback of decimation is that sampling jitter is increased with the same ratio as the decimation factor. With nominal primary frequency and decimation ratio of 16, the sampling jitter will be up to 85 µs x 16 = 1.36 ms. This means that sample age can be anything between 0 and 1.36 ms. To address this issue, the user can combine decimation with the Data Ready function. Data Ready is explained in chapter *Data Ready, DRY*.

5.5.3 SYNC input pin

High-performance systems may benefit from using multiple SCH16T series components. Depending on application SPI master clock conditions, the read operation of multiple parallel sensors can take longer than sensor internal register update period if individual MISO line is not used for each component. As a result of this, samples are being acquired from different time instants for each parallel sensor. In certain real-world inputs, this can lead to a significant apparent disagreement of sensors, as different time-instants are being sampled.

To mitigate this issue, a SYNC input pin has been introduced. When the master issues SYNC signal to all sensors in the system, the sensors' internal updates for RATE_XYZ1/2 and ACC_XYZ1/2/3 are frozen until SYNC pin is set LOW, or after time out period set by CTRL_SYNC_TOC_TH time-out counter. This allows enough time for the master to read all sensor data from a single time instant. CTRL_SYNC_TOC_TH is user-selectable with typical values ranging from 1.2 ms to 11.6 ms. Please refer to chapter 7.4.4 User interface control for user controls.

SYNC is only feasible on interpolated outputs RATE_XYZ1 and ACC_XYZ1/3. With decimated outputs and a decimation factor of 2 or above, most masters should have enough time to read the output registers before they are updated again.

Additionally, SYNC helps ensure that all 6-axis data is captured at the same time instant. In cases of slow SPI master clocks, even a single sensor might update its internal registers during slow read operations, resulting in different axes reflecting various timestamps. SYNC can also assist when system load is high and consistent sampling frequency cannot be maintained.

Please refer to illustration below.

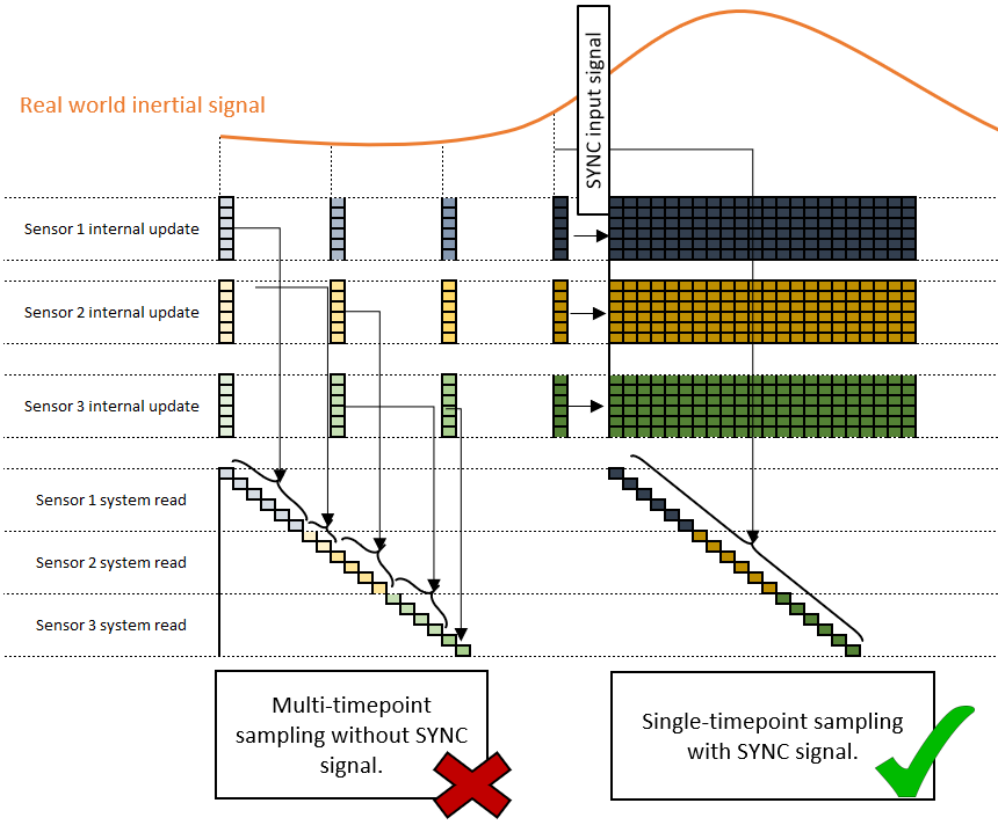

Figure 11 Illustration of SYNC usage when 3 slave sensors are read by single a master

5.5.4 Data Ready, DRY

In some system implementations, the rate at which the host processor can read peripherals may be limited. In such cases, using decimated outputs with an appropriate decimation factor can help ensure that the host system has enough time to read same sample from all axes. However, lowering the sensor update rate through decimation increases sampling jitter. As mentioned in chapter *5.5.1 Interpolation*, the worst-case sampling jitter can reach up to 85 µs with a decimation factor of 1; this jitter increases proportionally as the decimation factor rises.

In case jitter minimization is critical to the application, the user should utilize the data ready output pin (DRY_SYNC). When all sensor output channels are updated, DRY_SYNC triggers a rising edge to indicate that new samples are available. This rising edge can serve as a direct interrupt to initiate the sensor read operation, or the host can monitor this signal and ensure that data is read in bursts before the next expected internal update from the sensor. This approach helps prevent missing samples and avoids reading any samples twice. It's important to note that a new data ready pulse is generated only after all sensor data has been read.

Data Ready function is available for decimated outputs. If different data rate is selected for the outputs, the DRY_SYNC-pin operates with the lowest data rate of the decimated outputs.

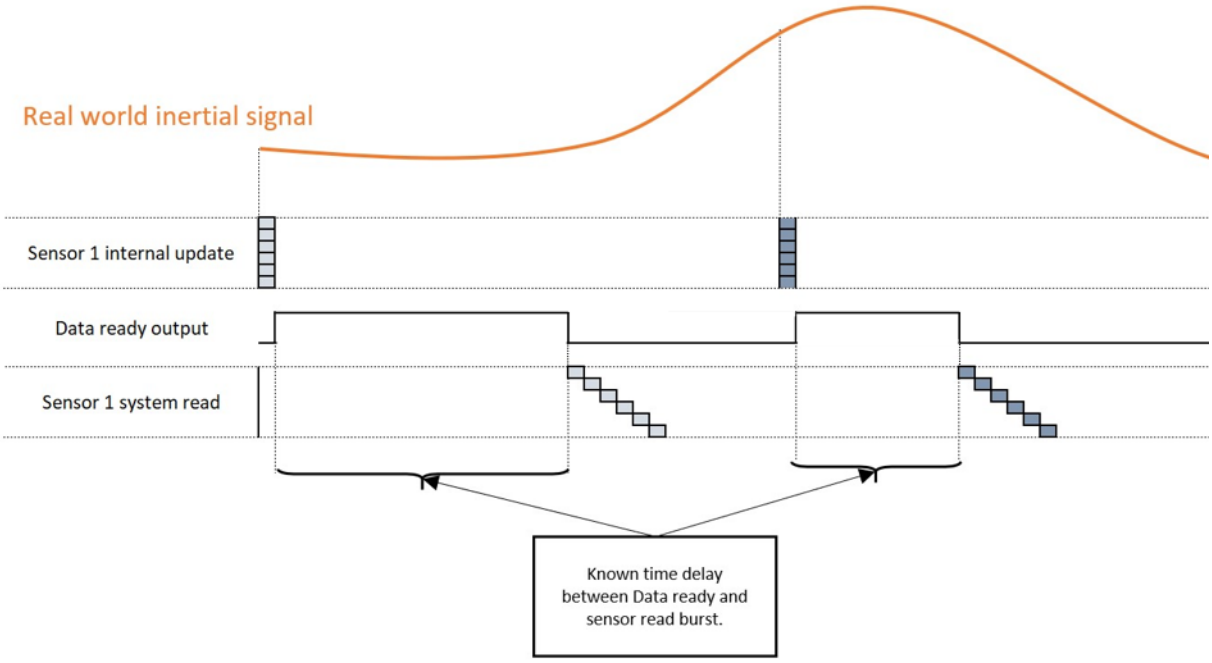

Figure 12 Illustration of Data Ready output signal. In this example, data is read in a burst between sensor internal updates. Note that sensor data must be read to clear Data Ready signal.

5.5.5 Data counter

Data counter is supported for decimated outputs RATE_XYZ2 and ACC_XYZ2. Value of data counter is increased by one when a new sample is available from corresponding RATE/ACC output. It can be understood as an index for the data output values. Using the data counter, the user can monitor that every wanted sample has been acquired and that the same sample has not been read twice.

When using 48-bit SPI protocol, 4-bit data counter value is included in MISO response frame. Data counter can be also used in 32-bit mode by reading DCNT_RATE and DCNT_ACC register values via SPI command. Register locations are described in chapter *7.3.1 Data counters.*

5.5.6 Frequency counter

Using frequency counter (FREQ_CNTR), user can acquire accurate clock information from component internal MCLK via SPI. The value of frequency counter register is increased by one with every 16th rising edge of master clock.

- MCLK = 1024 * F_PRIM.
- Nominal FREQ_CNTR = MCLK/16 = 1510 kHz
- If counter reaches 16383 (14b11 1111 1111 1111) it rolls back to zero
- Nominal counter reset frequency = 92 Hz

5.5.7 Time stamp

The component itself does not provide a time stamp; it must be generated by the host system. However, the SCH16T series provides an array of features allowing creation of accurate time stamps. The simplest approach to time stamping is utilizing the DRY_SYNC pin. When using data ready, the host system can issue a read command to the component after a defined time delay from receiving the DRY_SYNC interrupt signal and calculate the time stamp utilizing the host systems MCLK.

When SYNC is used, the host system has control over the sample update rate and can freeze the output by issuing a signal through the DRY_SYNC pin. This allows time stamp creation based on host system MCLK and SYNC input.

If the DRY_SYNC pin is not used, the user can define each components individual update rate with the frequency counter and then monitor with the data counter when the sample index has changed.

5.6 Recommended reading procedure for sensor data

Table 18 Default reading procedure bolded. For maximum performance 6300 Hz gyroscope and 4200 Hz accelerometer reading rate is recommended with LPF3, LPF4 and LPF5 settings. Minimum recommended reading rate depends on the decimation factor with LPF7 option.

Axis	Output	Minimize jitter	Decimation factors	ODR (Hz)	LPF	Cut-off frequency Nom (-3 dB) (Hz)	Minimum recommended reading rate (Hz)
Gyroscope	Interpolated	Read at minimum recommended reading rate (max jitter always <2.6 µs)	Not applicable	377000	LPF2	13	150
					LPF1	30	200
					LPF0	**68**	**500**
					LPF5	235	1000
					LPF3	280	1000
					LPF4	370	2000
					LPF7	Not defined	11800
	Decimated	Read at Data Ready	1-16	11800 - 740	LPF2	13	150
					LPF1	30	200
					LPF0	68	500
					LPF5	235	ODR-1000
					LPF3	280	ODR-1000
					LPF4	370	ODR-2000
					LPF7	Not defined	ODR
Accelerometer	Interpolated	Read at minimum recommended reading rate (max jitter always <2.6 µs)	Not applicable	377000	LPF2	13	150
					LPF1	30	200
					LPF0	**68**	**500**
					LPF5	190-210	1000
					LPF3	190-230	1000
					LPF4	190-230	1000
					LPF7	190-230	1000
	Decimated	Read at Data Ready	1-16	11800 - 740	LPF2	13	150
					LPF1	30	200
					LPF0	68	500
					LPF5	190-210	ODR-1000
					LPF3	190-230	ODR-1000
					LPF4	190-230	ODR-1000
					LPF7	190-230	ODR-1000

The optimal reading configuration depends on application, system timing requirements and hardware. High level examples of reading configurations are given below:

- Reading inertial data for leveling or positioning IMU.
    - Use default settings at minimum recommended reading rate.
- Maximum performance for dead reckoning.
    - Use an LPF setting with high bandwidth (LPF3, LPF4 and LPF5) and read the interpolated outputs with a minimum reading rate of 6300 Hz.
- Maximizing dead reckoning performance with limited bandwidth.

- Select a decimation ratio matching to systems bandwidth limits and read decimated outputs with minimum recommended reading rate.

- Synchronizing IMU signal with another low frequency signal while collecting every generated sample (e.g., Create FIFO buffer for GPS 1 Hz signal in host)
  - If necessary, reduce required memory to store samples at host by output decimation (Available typical ODR range on decimated outputs 740 Hz - 11800 Hz).
  - Read decimated outputs at Data Ready signal (monitor DRY_SYNC pin in Data Ready mode or use it directly as trigger signal for read command).
  - Store the samples in host for processing (samples can be timestamped in the host memory based on Data Ready pulse).

DCNT function and/or FREQ_CNTR register can be used to keep track of sensor time.

5.7 Diagnostics flags and status behavior

The primary way to determine the status of the sensor is to use status (S) bits S0 and S1 that are received with every response MISO SPI communication. If the S bits are not “00” signifying normal operation the data of the MISO frame is potentially not reliable. S bits generate for each axis and output option separately.

Status bits are acknowledged and cleared by reading the data registers normally. Status bits can be cleared also by reading corresponding 1st level status registers (all other status registers but STAT_SUM or STAT_SUM_SAT). Clearing time is determined by FTREE_TDEL.

Table 19 Fault clearing logic by reading data register

Read Sensor Data Register	Status registers that are cleared after FTREE_TDEL delay
RATE_X1 | RATE_X2	STAT_COM & STAT_RATE_COM & STAT_RATE_X
RATE_Y1 | RATE_Y2	STAT_COM & STAT_RATE_COM & STAT_RATE_Y
RATE_Z1 | RATE_Z2	STAT_COM & STAT_RATE_COM & STAT_RATE_Z
ACC_X1 | ACC_X2 | ACC_X3	STAT_COM & STAT_ACC_X
ACC_Y1 | ACC_Y2 | ACC_Y3	STAT_COM & STAT_ACC_Y
ACC_Z1 | ACC_Z2 | ACC_Z3	STAT_COM & STAT_ACC_Z
TEMP	STAT_COM

In some applications saturation events can be frequent due to harsh low frequency vibration. Therefore, saturation flag filtering can be used to lower the sensitivity to the saturation events.

Table 20 Saturation Flag detection and clearing time. More information about the saturation flag filter and clearing time in chapters 0

Saturation flag user control and 7.4.4 User interface control

Saturation detection time (typical)	Saturation clearing time (typical)
0.08 ms (default) to 42 ms. Detection time is controlled by how many consecutive saturation events are needed for detection. Event count is filtered from 1 (default) to 496.	0.078 ms to 5 ms. 2.5 ms (default) Clearing time is determined by FTREE_TDEL

6 Component interfacing

6.1 Safe SPI

Product supports Safe SPI v2.0 protocol to transfer data between SPI master and registers of SCH16T series ASIC. The product always operates as a slave device in master-slave operation mode. 3-wire SPI connection cannot be used. Communication between master and slave is done with pins described below in *Table 21 SPI interface pins.*

Table 21 SPI interface pins

SPI interface pin	Description	Communication direction
CS	Chip Select (active low)	MCU to ASIC
SCK	Serial Clock	MCU to ASIC
MOSI	Master Out Slave In	MCU to ASIC
MISO	Master In Slave Out	ASIC to MCU

SPI communication uses out-of-frame protocol, so each transfer has two phases. The first phase contains the SPI command (request) and the data (response) of the previous command. The second phase contains the next request and the response to the request of the first phase. The first response after reset is undefined and can be discarded.

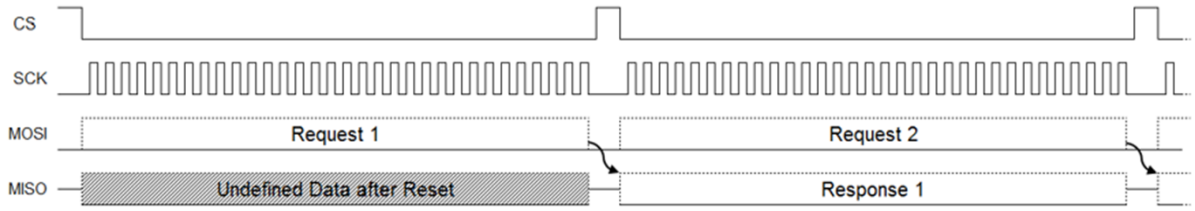

Figure 13 SPI protocol example

Product SPI block implements two different SPI protocol types. Both protocol types can be used during operation by defining the SPI frame bit length.

- SafeSPI2 32-bit frame, SPI32BF
- SafeSPI2 48-bit frame, SPI48BF

SPI block does not implement the complete SafeSPI v2.0 specification. Summary of supported features can be seen in table below. For Safe SPI standard, please refer to www.SafeSPI.org

Table 22 SCH16T series supported features of SafeSPI v2.0

Supported feature	Description
<48/32oof>	Block receives and transmits 32-bit and 48-bit Out-of-frame SPI frames. In-frame protocols are not supported.
<FrTyp>	MOSI frame width is defined by received frame length. Frame is effective only if width is 32-bits or 48-bits and the CRC is valid.
<SelBitWidthByAdr >	Next MISO frame width is decided by <FrTyp>
<Sel4SlaveByAdrPin>	Two MSB address bits can be used to select one of four slaves when one CS signal pin is in use. Slave compares the two MSBs to a reference value defined by two input pins.
<FixedSensorFrame>	Frame content is well defined and fixed.
<CLWide>	Wide range for “total signal load capacitance”
<DCnt>	Block updates a wrapping 4-bit sample counter each time new sensor data is generated.

Supported feature	Description
<IDS>	Internal Data Status field includes additional status information for sensor data.
<CAP>	Not implemented and replaced with fixed value.

The SPI transmission is always started with the CS falling edge and terminated with the CS rising edge. The data is captured on the SCK's rising edge (MOSI line) and it is propagated on the SCK's falling edge (MISO line). This equals to SPI Mode 0 (CPOL = 0 and CPHA = 0), an example with 32-bit frame can be seen in *Figure 14 SPI frame format example (32-bit)*.

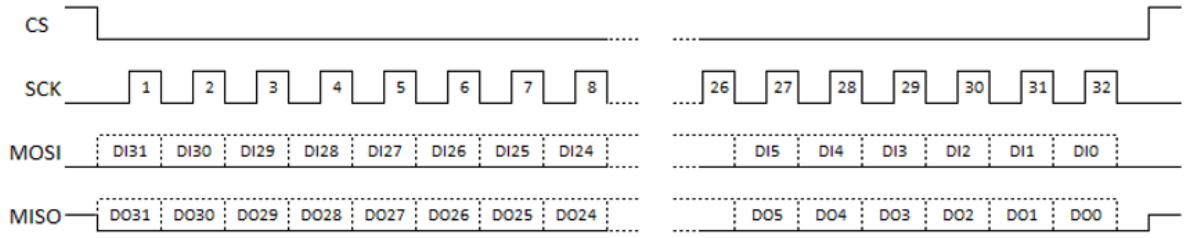

Figure 14 SPI frame format example (32-bit)

6.2 SPI frame structure

SPI Frame format is explained in figure below and Table 23 SPI bit definitions

SPI48BF

Bit	47	46	45	44	43	42	41	40	39	38	37	36	35	34	33	32	31	30	29	28	27	26	25	24	23	22	21	20	19	18	17	16	15	14	13	12	11	10	9	8	7	6	5	4	3	2	1	0
MOSI	TA 9:0										RW	0	FT	AE							DATAI 19:0																				CRC8							
MISO (sensor data)	D	SA 9:0									IDS	CE	S1:0	DCNT					*		SENSOR 19:0																				CRC8							
MISO (other data)	D	SA 9:0									IDS	CE	S1:0	*							INFO 19:0																				CRC8							

SPI32BF

Bit	31	30	29	28	27	26	25	24	23	22	21	20	19	18	17	16	15	14	13	12	11	10	9	8	7	6	5	4	3	2	1	0
MOSI	TA 9:0										RW	0	FT	DATAI 15:0																CRC3		
MISO (sensor data)	D	SA 9:0									S1	SENSOR 15:0																S0	CRC3		
MISO (other data)	D	SA 9:0									S1	INFO 15:0																S0	CRC3		

Figure 15 SPI frame format for 48-bit and 32-bit frames

Table 23 SPI bit definitions

Symbol	Description
D	D=1 condition: Gyro data register read ACC data register read Temperature data register read D=0 condition: Any other register than data registers listed above
TA	Defines the **Target Address** for SCH16T series TA[9:8] bits are used as Chip Select information, and thus they are not part of the effective address. TA[7:0] are used as effective address within the chip.
SA	Contains the **Source Address**. It has the same content as TA.
RW	**Read/write** access selector. Read is selected with 0 and write with 1.
FT (FrTyp)	Frame Type for next MISO frame: 0 for SPI32BF, 1 for SPI48BF. MOSI frame width is defined by the MOSI frame itself, hence this field should match the next incoming MOSI frame since out-of-frame responses are in use.
AE	Reserved. Bits should be ignored.
DATAI	MOSI line input **data** from SPI host. This field is 20-bits wide for SPI48BF and 16-bits for SPI32BF.
SENSOR	MISO line **sensor type output data** towards SPI host.
INFO	MISO line **non-sensor type output data** towards SPI host. This field is 20-bits wide for SPI48BF and 16-bits for SPI32BF. 20-bit data is clipped from LSB end to 16-bit with SPI32BF, i.e. data is MSB aligned.
*	Unused field that is ignored for receive and set to all-zeros for transmit.
S1:0, S1, S0	**Sensor status** indication.
CE	**Command Error** indication. SCH16T series reports only semantically invalid frame content using this field. SPI protocol level errors are indicated with High-Z on MISO pin.
IDS	**Internal Data Status** indication. SCH16T series uses this field to indicate common cause error. This is redundant, more accurate info is seen from sensor status (S1:S0).
DCNT	A wrapping 4-bit sensor data counter.
CRC8 (C7:0)	8-bit CRC reference for SPI48BF. Calculated over bits 47 to 8.
CRC3 (C2:0)	3-bit CRC reference for SPI32BF. Calculated over bits 31 to 3.

6.3 Multi-slave operation

SCH16T series SPI supports up to four slave devices on single bus by using either multiple Chip Select lines, one for each slave, or with one common Chip Select (CS) and using TA9 and TA8 pins to enable logical addressing.

Pin 3 (TA9) and pin 4 (TA8) correspond to the bits TA9:9 and TA8:8 included in the SPI MOSI frame.

Issuing a pull-up signal to either pin flips the corresponding component logic level -bit to ‘1’. All options for addressing four slaves are shown in figure below.

Example: Compose MOSI frame targeted to component #3

1. Set pin 3 (TA9) low and pin 4 (TA8) high
2. Send MOSI frame in which TA9:8 is written as ‘01’

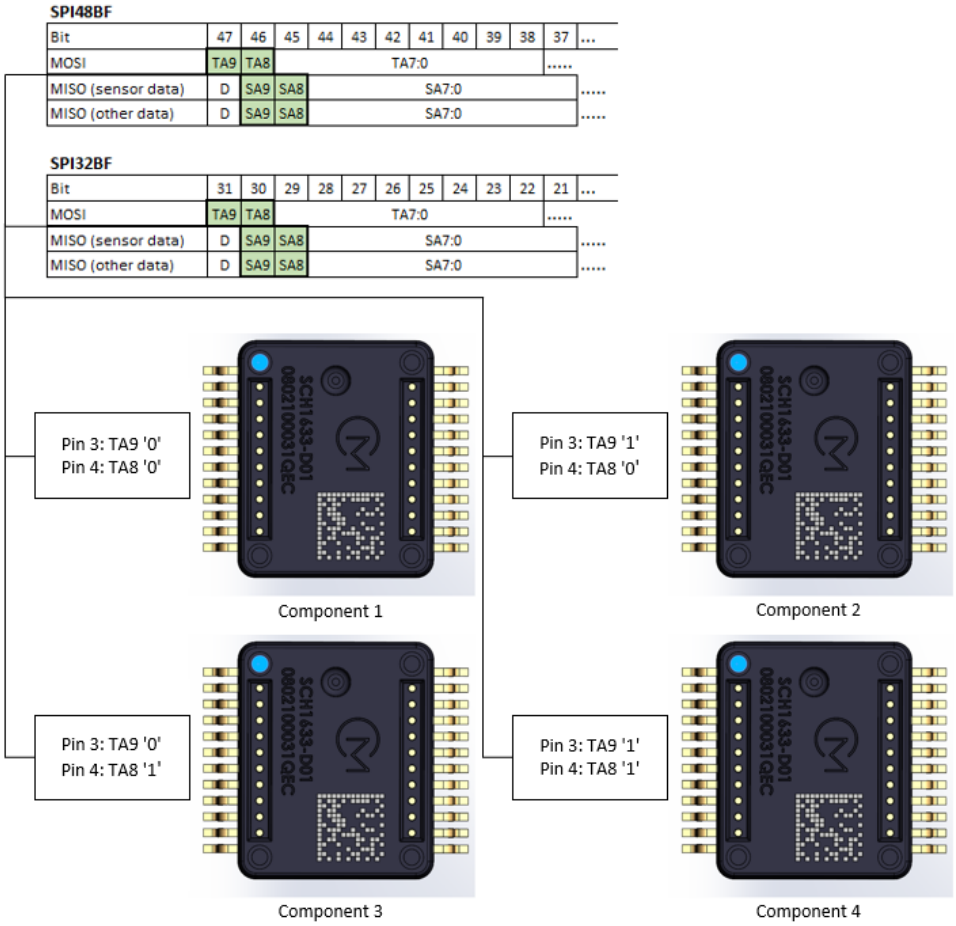

Figure 16 Multi-slave operation

SCH16T has been designed for multi-sensor configurations and validated with up to 12 SCH16T sensors on a single PCB. MEMS and housing have been designed carefully so that there are no vibration or electrical couplings between the SCH16T devices enabling a high-performance sensor array without any design restrictions. Sensor arrays can offer improved noise and reliability benefits for certain applications.

6.4 SPI frame status bits

Status bits indicate functional status of the sensor. See table below for definitions of bits S[1:0]

S[1:0] priority order is 11 (Initialization) → 01 (Error) → 10 (Saturation) → 00 (Normal operation)

Note that the Status bits S[1:0] are always '00' on the response frame for register write commands.

Table 24 Status bit description

Status bits S[1:0]	Description
00	Normal operation
01	Error status
10	Saturation error
11	Initialization running

IDS, or Internal Data Status bit is redundant error status bit for S[1:0] in case of common status error. See table below for definitions of IDS bit.

Table 25 IDS bit description

Status bits IDS	Description
0	Normal operation
1	Common Error

CE status bit reports Command Errors. See table below for definitions of CE bit.

The following access errors are detected and reported by CE bit:

- Write request when EOI is active, excluding write to reset activation register.
- Read or write request to unused/undefined address.
- Write request to read-only register.

Table 26 CE bit description

Status bits CE	Description
0	Normal operation
1	Command Error

The SPI frame status bit generation logic is explained in the figure below. Internal safety mechanism status signals trigger component internal 2nd level safety flags. These 2nd level status flags then trigger the 1st level status register flags after assessment against user defined flag settings and flag grouping logic assessment. Flags in status summary registers STAT_SUM and STAT_SUM_SAT are generated based on triggered 1st level status registers. The summary status flags are then reflected to SPI frame status bits with the logic explained above. Note that fault state is indicated by '0' in component internal registers and '1' in SPI frame status bits.

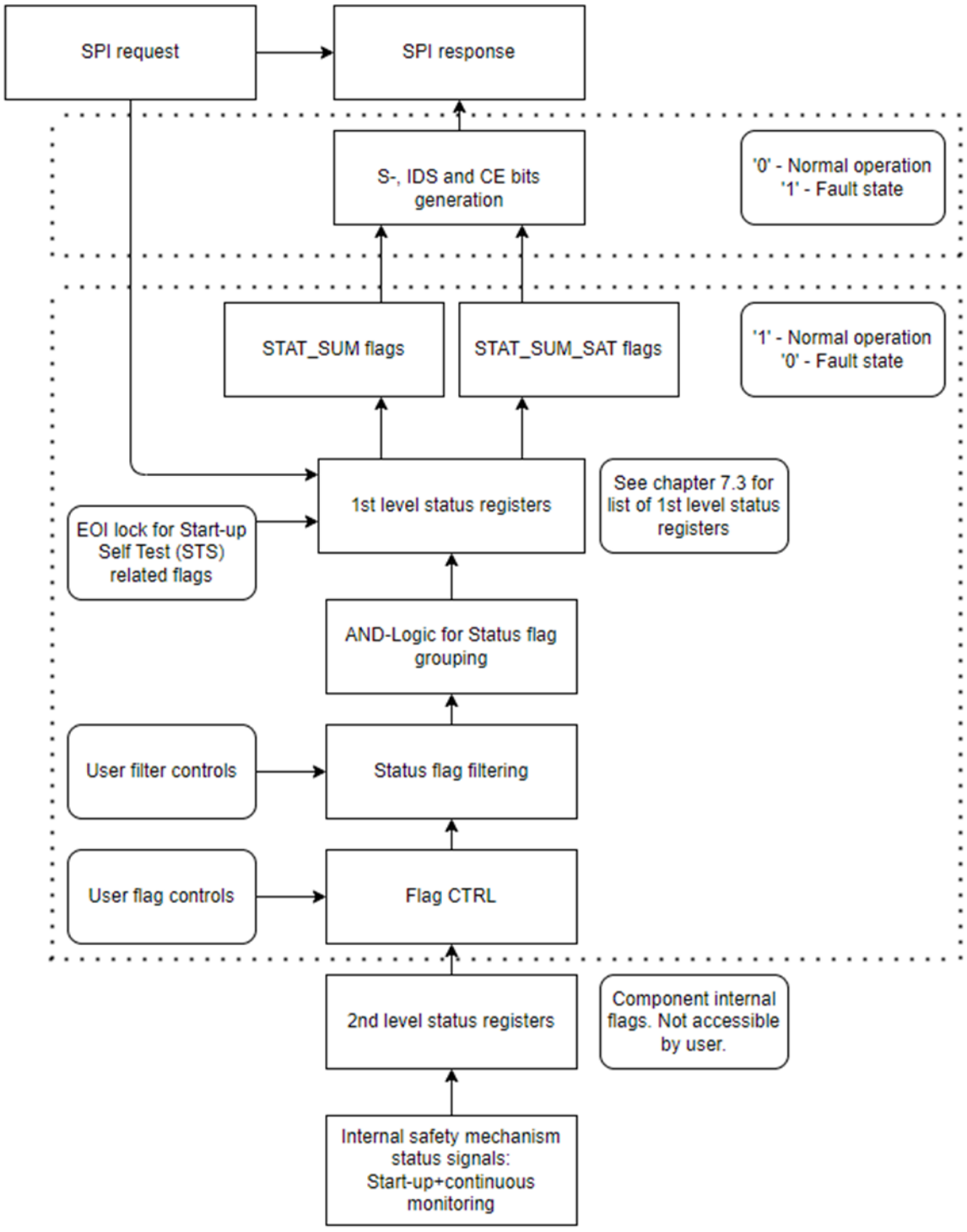

Figure 17 Status flag flow chart

6.5 Cyclic redundancy check (CRC)

```
uint8_t CRC8(uint64_t SPIframe)
{
   uint64_t data = SPIframe & 0xFFFFFFFFFF00LL;
   uint8_t crc = 0xFF;

   for (int i = 47; i >= 0; i--)
   {
      uint8_t data_bit = (data >> i) & 0x01;
      crc = crc & 0x80 ? (uint8_t)((crc << 1) ^ 0x2F) ^ data_bit : (uint8_t)(crc << 1) | data_bit;
   }

   return crc;
}

uint8_t CRC3(uint32_t SPIframe)
{
      uint32_t data = SPIframe & 0xFFFFFFF8;
      uint8_t crc = 0x05;

      for (int i = 31; i >= 0; i--)
      {
            uint8_t data_bit = (data >> i) & 0x01;
            crc = crc & 0x4 ? (uint8_t)((crc << 1) ^ 0x3) ^ data_bit : (uint8_t)(crc << 1) | data_bit;
            crc &= 0x7;
      }
      return crc;
}
```

Figure 18 C-programming language example for CRC calculation. For more information about headers and SPI communications, please refer to SCH1600 C-code example. Example code is not performance optimized.

6.5.1 SPI48BF CRC

SPI48BF uses 8-bit CRC (CRC8). CRC is calculated from MSB towards LSB i.e., from bit 47 to 0. Bits from 7 to 0 are set initially as 0.

Generator polynomial is 0x97 + 1 (b1001 0111 1) ($X^8+X^5+X^3+X^2+X+1$).

Calculation is initialized with start value of 0xFF and a target value of 0x00 (no inversion of CRC result).

Final CRC is the direct value of the calculation.

For further information please refer to chapter 4.4.4 “48Bit frame CRC Definition” of the original “SafeSPI – Serial Peripheral Interface for Automotive Safety Rev 2.0” specification.

Table 27 CRC definition for 48-bit frames

Parameter	Value
Name	CRC-8
Width	8-bit
Generator polynomial (Koopman notation)	0x97 ($X^8+X^5+X^3+X^2+X+1$)
Initial	0xFF
XOR out	0x00 (no inversion of CRC result)

6.5.2 SPI32BF CRC

SPI32BF uses 3-bit CRC (CRC3). CRC is calculated from MSB towards LSB i.e., from bit 31 to 0. Bits from 2 to 0 are set initially as 0.

Generator polynomial is 0x5 +1 (b1011) (X^3+X+1)

Calculation is initialized with start value of 0x5 and a target value of 0x0 (no inversion of CRC result).

Final CRC is the direct value of the calculation.

For further information please refer to chapter 4.3.5 “32Bit CRC Definition” of the original “SafeSPI – Serial Peripheral Interface for Automotive Safety Rev 2.0” specification.

Table 28 CRC definition for 32-bit frames

Parameter	Value
Name	CRC-3
Width	3-bit
Generator polynomial (Koopman notation)	0x5 (X^3+X+1)
Initial	0x5
XOR out	0x0 (no inversion of CRC result)

6.6 Operations

This chapter lists some common SPI operations. Default '00' TA chip select address is used for example operations. For more detailed component operation description, please refer to SCH1600 C-code example. For frame construction please refer to the chapter *6.2 SPI frame structure*.

Table 29 Common operations and their equivalent SPI frames

Command	Register name	Register public address	32-bit SPI Hex frame	48-bit SPI Hex frame
Set Operation mode EN_SENSOR	CTRL_MODE	15h0035	0x0D60000A	0x0D68000001D3
Set EOI bit	CTRL_MODE	15h0035	0x0D60001C	0x0D680000038D
Reset via SPI (not recommended)	CTRL_RESET	15h0036	0x0DA00054	0x0DA800000AC3
Read RATE filter setting	CTRL_FILT_RATE	15h0025	0x09400007	0x0948000000FA
Select LPF0 filter for RATE_XYZ	CTRL_FILT_RATE	15h0025	0x09600006	0x096800000016
Select LPF1 filter for RATE_XYZ	CTRL_FILT_RATE	15h0025	0x0960024C	0x096800004988
Select LPF2 filter for RATE_XYZ	CTRL_FILT_RATE	15h0025	0x09600492	0x096800009205
Select LPF3 filter for RATE_XYZ	CTRL_FILT_RATE	15h0025	0x096006D8	0x09680000DB9B
Select LPF4 filter for RATE_XYZ	CTRL_FILT_RATE	15h0025	0x09600925	0x096800012430
Select LPF5 filter for RATE_XYZ	CTRL_FILT_RATE	15h0025	0x09600B6F	0x096800016DAE
Select LPF6 filter for RATE_XYZ	CTRL_FILT_RATE	15h0025	0x09600DB1	0x09680001B623
Select LPF7 filter for RATE_XYZ	CTRL_FILT_RATE	15h0025	0x09600FFB	0x09680001FFBD
Select LPF0 filter for ACC 1/2	CTRL_FILT_ACC12	15h0026	0x09A00000	0x09A800000020
Select LPF1 filter for ACC 1/2	CTRL_FILT_ACC12	15h0026	0x09A0024A	0x09A8000049BE
Select LPF2 filter for ACC 1/2	CTRL_FILT_ACC12	15h0026	0x09A00494	0x09A800009233
Select LPF3 filter for ACC 1/2	CTRL_FILT_ACC12	15h0026	0x09A006DE	0x09A80000DBAD
Select LPF4 filter for ACC 1/2	CTRL_FILT_ACC12	15h0026	0x09A00923	0x09A800012406
Select LPF5 filter for ACC 1/2	CTRL_FILT_ACC12	15h0026	0x09A00B69	0x09A800016D98
Select LPF6 filter for ACC 1/2	CTRL_FILT_ACC12	15h0026	0x09A00DB7	0x09A80001B615
Select LPF7 filter for ACC 1/2	CTRL_FILT_ACC12	15h0026	0x09A00FFD	0x09A80001FF8B
Read ACC 1/2 filter setting	CTRL_FILT_ACC12	15h0026	0x09800001	0x0988000000CC
Select LPF0 filter for ACC 3	CTRL_FILT_ACC3	15h0027	0x09E00002	0x09E8000000D7
Select LPF1 filter for ACC 3	CTRL_FILT_ACC3	15h0027	0x09E00248	0x09E800004949
Select LPF2 filter for ACC 3	CTRL_FILT_ACC3	15h0027	0x09E00496	0x09E8000092C4
Select LPF3 filter for ACC 3	CTRL_FILT_ACC3	15h0027	0x09E006DC	0x09E80000DB5A
Select LPF4 filter for ACC 3	CTRL_FILT_ACC3	15h0027	0x09E00921	0x09E8000124F1
Select LPF5 filter for ACC 3	CTRL_FILT_ACC3	15h0027	0x09E00B6B	0x09E800016D6F
Select LPF6 filter for ACC 3	CTRL_FILT_ACC3	15h0027	0x09E00DB5	0x09E80001B6E2
Select LPF7 filter for ACC 3	CTRL_FILT_ACC3	15h0027	0x09E00FFF	0x09E80001FF7C
Read filter for ACC 3	CTRL_FILT_ACC3	15h0027	0x09C00003	0x09C80000003B
Read RATE_X1	RATE_X1	15h0001	0x00400001	0x0048000000AC
Read RATE_Y1	RATE_Y1	15h0002	0x00800007	0x00880000009A
Read RATE_Z1	RATE_Z1	15h0003	0x00C00005	0x00C80000006D
Read RATE_X2	RATE_X2	15h000A	0x02800001	0x0288000000EF
Read RATE_Y2	RATE_Y2	15h000B	0x02C00003	0x02C800000018
Read RATE_Z2	RATE_Z2	15h000C	0x03000006	0x030800000083
Read ACC_X1	ACC_X1	15h0004	0x01000000	0x0108000000F6
Read ACC_Y1	ACC_Y1	15h0005	0x01400002	0x014800000001
Read ACC_Z1	ACC_Z1	15h0006	0x01800004	0x018800000037

Command	Register name	Register public address	32-bit SPI Hex frame	48-bit SPI Hex frame
Read ACC_X2	ACC_X2	15h000D	0x03400004	0x034800000074
Read ACC_Y2	ACC_Y2	15h000E	0x03800002	0x038800000042
Read ACC_Z2	ACC_Z2	15h000F	0x03C00000	0x03C8000000B5
Read ACC_X3	ACC_X3	15h0007	0x01C00006	0x01C8000000C0
Read ACC_Y3	ACC_Y3	15h0008	0x02000005	0x02080000002E
Read ACC_Z3	ACC_Z3	15h0009	0x02400007	0x0248000000D9
Read Temperature	TEMP	15h0010	0x04000004	0x0408000000B1
Read Summary Status	STAT_SUM	15h0014	0x05000007	0x05080000001C
Read Saturation Summary Status	STAT_SUM_SAT	15h0015	0x05400005	0x0548000000EB
Read Level-1 Common Status	STAT_COM	15h0016	0x05800003	0x0588000000DD
Read Level-1 Rate common Status	STAT_RATE_COM	15h0017	0x05C00001	0x05C80000002A
Read Level-1 Rate X Status	STAT_RATE_X	15h0018	0x06000002	0x0608000000C4
Read Level-1 Rate Y Status	STAT_RATE_Y	15h0019	0x06400000	0x064800000033
Read Level-1 Rate Z Status	STAT_RATE_Z	15h001A	0x06800006	0x068800000005
Read Level-1 ACC X Status	STAT_ACC_X	15h001B	0x06C00004	0x06C8000000F2
Read Level-1 ACC Y Status	STAT_ACC_Y	15h001C	0x07000001	0x070800000069
Read Level-1 ACC Z Status	STAT_ACC_Z	15h001D	0x07400003	0x07480000009E
Read SYNC_ACTIVE Status	STAT_SYNC_ACTIVE	15h001E	0x07800005	0x0788000000A8
Read Low Power Mode Status	STAT_INFO	15h001F	0x07C00007	0x07C80000005F

7 Register definition

SPI frame bit D1/D0 is specified according to Safe SPI standard.

The sensor data bit D identifies if SPI response frame contains sensor data (i.e., identifies response frame format). The frame bit for registers defined in SPI frame bit D column in this chapter.

D=0: no sensor data, e.g., status data or read back of configuration data

D=1: sensor data

7.1 Register map user guide

7.1.1 Value and address formats

Several value formats are used in this data sheet. These are described in table below.

Table 30 Value formats

Decimal	5-bit decimal	5-bit signed hex	5-bit binary
13	13d	0Dh	5b01101
-13	-13d	13h	5b10011

All essential register content of SCH16T series ASIC is mirrored to public memory banks 0-3. The register address is a 4-bit offset within a memory bank. final public address is formed by adding address offset to public bank address, for example STAT_SUM register:

- Bank address: 15h0010
- Address offset: 4h4
- Public Address: 15h0010 + 4h4 = 15h0014

7.1.2 Register map overview

Table 31 Register map overview with memory banks, address offsets and data widths

Register name	Bank	Bank address	Address offset	Data width	Register type	SPI frame bit D	Public address
Reserved	0	15h0000	4h0	-	-	-	15h0000
RATE_X1	0	15h0000	4h1	20-bit	Data	D1	15h0001
RATE_Y1	0	15h0000	4h2	20-bit	Data	D1	15h0002
RATE_Z1	0	15h0000	4h3	20-bit	Data	D1	15h0003
ACC_X1	0	15h0000	4h4	20-bit	Data	D1	15h0004
ACC_Y1	0	15h0000	4h5	20-bit	Data	D1	15h0005
ACC_Z1	0	15h0000	4h6	20-bit	Data	D1	15h0006
ACC_X3	0	15h0000	4h7	20-bit	Data	D1	15h0007
ACC_Y3	0	15h0000	4h8	20-bit	Data	D1	15h0008
ACC_Z3	0	15h0000	4h9	20-bit	Data	D1	15h0009
RATE_X2	0	15h0000	4hA	20-bit	Data	D1	15h000A
RATE_Y2	0	15h0000	4hB	20-bit	Data	D1	15h000B
RATE_Z2	0	15h0000	4hC	20-bit	Data	D1	15h000C
ACC_X2	0	15h0000	4hD	20-bit	Data	D1	15h000D
ACC_Y2	0	15h0000	4hE	20-bit	Data	D1	15h000E
ACC_Z2	0	15h0000	4hF	20-bit	Data	D1	15h000F
TEMP	1	15h0010	4h0	16-bit	Data	D1	15h0010
RATE_DCNT	1	15h0010	4h1	12-bit	Counter	D0	15h0011
ACC_DCNT	1	15h0010	4h2	14-bit	Counter	D0	15h0012
FREQ_CNTR	1	15h0010	4h3	16-bit	Counter	D0	15h0013
STAT_SUM	1	15h0010	4h4	16-bit	Status	D0	15h0014
STAT_SUM_SAT	1	15h0010	4h5	16-bit	Status	D0	15h0015
STAT_COM	1	15h0010	4h6	16-bit	Status	D0	15h0016
STAT_RATE_COM	1	15h0010	4h7	16-bit	Status	D0	15h0017
STAT_RATE_X	1	15h0010	4h8	16-bit	Status	D0	15h0018
STAT_RATE_Y	1	15h0010	4h9	16-bit	Status	D0	15h0019
STAT_RATE_Z	1	15h0010	4hA	16-bit	Status	D0	15h001A
STAT_ACC_X	1	15h0010	4hB	16-bit	Status	D0	15h001B
STAT_ACC_Y	1	15h0010	4hC	16-bit	Status	D0	15h001C
STAT_ACC_Z	1	15h0010	4hD	16-bit	Status	D0	15h001D
STAT_SYNC_ACTIVE	1	15h0010	4hE	12-bit	Status	D0	15h001E
STAT_INFO	1	15h0010	4hF	9-bit	Status	D0	15h001F
Reserved	2	15h0020	4h0	-	-	-	15h0020
Reserved	2	15h0020	4h1	-	-	-	15h0021
Reserved	2	15h0020	4h2	-	-	-	15h0022
Reserved	2	15h0020	4h3	-	-	-	15h0023
Reserved	2	15h0020	4h4	-	-	-	15h0024
CTRL_FILT_RATE	2	15h0020	4h5	9-bit	Control	D0	15h0025
CTRL_FILT_ACC12	2	15h0020	4h6	9-bit	Control	D0	15h0026
CTRL_FILT_ACC3	2	15h0020	4h7	9-bit	Control	D0	15h0027
CTRL_RATE	2	15h0020	4h8	15-bit	Control	D0	15h0028

Register name	Bank	Bank address	Address offset	Data width	Register type	SPI frame bit D	Public address
CTRL_ACC12	2	15h0020	4h9	15-bit	Control	D0	15h0029
CTRL_ACC3	2	15h0020	4hA	3-bit	Control	D0	15h002A
CTRL_RATE_FLAG_1	2	15h0020	4hB	15-bit	Control	D0	15h002B
CTRL_RATE_FLAG_2	2	15h0020	4hC	15-bit	Control	D0	15h002C
CTRL_ACC_FLAG_1	2	15h0020	4hD	15-bit	Control	D0	15h002D
CTRL_ACC_FLAG_2	2	15h0020	4hE	15-bit	Control	D0	15h002E
Reserved	2	15h0020	4hF	-	-	-	15h002F
Reserved	3	15h0030	4h0	-	-	-	15h0030
Reserved	3	15h0030	4h1	-	-	-	15h0031
Reserved	3	15h0030	4h2	-	-	-	15h0032
CTRL_USER_IF	3	15h0030	4h3	16-bit	Control	D0	15h0033
CTRL_ST	3	15h0030	4h4	13-bit	Control	D0	15h0034
CTRL_MODE	3	15h0030	4h5	4-bit	Control	D0	15h0035
CTRL_RESET	3	15h0030	4h6	4-bit	Control	D0	15h0036
SYS_TEST	3	15h0030	4h7	16-bit	Other	D0	15h0037
SPARE_1	3	15h0030	4h8	16-bit	Other	D0	15h0038
SPARE_2	3	15h0030	4h9	16-bit	Other	D0	15h0039
SPARE_3	3	15h0030	4hA	16-bit	Other	D0	15h003A
ASIC_ID	3	15h0030	4hB	12-bit	Other	D0	15h003B
COMP_ID	3	15h0030	4hC	16-bit	Other	D0	15h003C
SN_ID1	3	15h0030	4hD	16-bit	Other	D0	15h003D
SN_ID2	3	15h0030	4hE	16-bit	Other	D0	15h003E
SN_ID3	3	15h0030	4hF	16-bit	Other	D0	15h003F

7.2 Sensor data block

Table 32 Overview of registers for sensor data. The data is in 2's complement format

Register name	Register description	R/RW	SPI frame bit D	Public address
RATE_X1	Output, x-axis gyroscope, interpolation, common low pass filter with RATE_X2	R	D1	15h0001
RATE_Y1	Output, y-axis gyroscope, interpolation, common low pass filter with RATE_Y2	R	D1	15h0002
RATE_Z1	Output, z-axis gyroscope, interpolation, common low pass filter with RATE_Z2	R	D1	15h0003
ACC_X1	Output, x-axis accelerometer, interpolation, common low pass filter with ACC_X2	R	D1	15h0004
ACC_Y1	Output, y-axis accelerometer, interpolation, common low pass filter with ACC_Y2	R	D1	15h0005
ACC_Z1	Output, z-axis accelerometer, interpolation, common low pass filter with ACC_Z2	R	D1	15h0006
ACC_X3	Output, x-axis accelerometer, auxiliary signal path with interpolation and individually configurable low pass filter setting.	R	D1	15h0007
ACC_Y3	Output, y-axis accelerometer, auxiliary signal path with interpolation and individually configurable low pass filter setting.	R	D1	15h0008
ACC_Z3	Output, z-axis accelerometer, auxiliary signal path with interpolation and individually configurable low pass filter setting.	R	D1	15h0009
RATE_X2	Output, x-axis gyroscope, configurable decimation filter, common low pass filter with RATE_X1	R	D1	15h000A
RATE_Y2	Output, y-axis gyroscope, configurable decimation filter, common low pass filter with RATE_Y1	R	D1	15h000B
RATE_Z2	Output, z-axis gyroscope, configurable decimation filter, common low pass filter with RATE_Z1	R	D1	15h000C
ACC_X2	Output, x-axis accelerometer, configurable decimation filter, common low pass filter with ACC_X1	R	D1	15h000D
ACC_Y2	Output, y-axis accelerometer, configurable decimation filter, common low pass filter with ACC_Y1	R	D1	15h000E
ACC_Z2	Output, z-axis accelerometer, configurable decimation filter, common low pass filter with ACC_Z1	R	D1	15h000F
TEMP	Output, temperature sensor	R	D1	15h0010

7.2.1 Example of angular rate data conversion

Interpolated output of Rate X is used as example. Data is in 2's complement format.

16-bit data from 32-bit frames

In 16-bit mode, default sensitivity is 66.25 LSB/(°/s)

If Rate X register (15h0001) read result is Rate X = 802**FFE0**7h, content is converted to angular rate as follows:

- 802h = 1 0 0 0000 0001 0b (contains D bit, address bits and first status bit)
- FFE0h = 1111 1111 1110 0000b (Rate X register content)
- FFE0h in 2's complement format = -32d
- Angular rate = -32 LSB/sensitivity = -32 LSB/ (66.25 LSB/(°/s)) = -0.48 °/s
- 7h = CRC of 802FFE0h

20-bit data from 48-bit frames

In 20-bit mode, default sensitivity is 1060 LSB/(°/s)

If Rate X register (15h0001) read result is Rate X = 80200**FFE00**ADh, content is converted to angular rate as follows:

- 80200h = 1 0 0 0000 0001 0 0 00 0000 0b (contains D-bit, address-, status- and DCNT bits and one empty bit)
- FFE00h = 1111 1111 1110 0000 0000b (Rate X register content)
- FFE00h in 2's complement format = -512d
- Angular rate = -512 LSB/sensitivity = -512 LSB/ (1060 LSB/(°/s)) = -0.48 °/s
- ADh = CRC of 80200FFE00h

7.2.2 Example of acceleration data conversion

Interpolated output of ACC Y is used as example. Data is in 2's complement format.

16-bit data from 32-bit frames

In 16-bit mode, default sensitivity is 200 LSB/(m/s^2)

If ACC Y register (15h0005) read result is ACC Y = 80A**00DC**6h, content is converted to acceleration as follows:

- 80Ah = 1 0 0 0000 0101 0b (contains D bit, address bits and first status bit)
- 00DCh = 0000 0000 1101 1100b (ACC Y register content)
- 00DCh in 2's complement format = 220d
- Acceleration = 220 LSB/sensitivity = 220 LSB/ (200 LSB/(m/s^2)) ≈ 1.1 m/s^2
- 6h = CRC of 80A00DC0h

20-bit data from 48-bit frames

In 20-bit mode, default sensitivity is 3200 LSB/(m/s^2)

If ACC Y register (15h0005) read result is ACC Y = 80A00**00DC0**DBh, content is converted to acceleration as follows:

- 80A00h = 1 0 0 0000 0101 0 0 00 0000 0b (contains D-bit, address-, status- and DCNT bits and one empty bit)

- 00DC0h = 0000 0000 1101 1100 0000b (ACC Y register content)
- 00DC0h in 2's complement format = 3520d
- Acceleration= 3520 LSB/sensitivity = 3520 LSB/ (3200 LSB/(m/s^2)) ≈ 1.1 m/s^2
- DBh = CRC of 80A00DC000h

7.2.3 Example of temperature data conversion

16-bit data from 32-bit frames

Temperature signal sensitivity is 100 LSB/°C

If TEMP register (15h0010) read result is TEMP = 820**00DC**5h, content is converted to temperature as follows:

- 820h = 1 0 0 0001 0000 0b (contains D bit, address bits and first status bit)
- 00DCh =0000 0000 1101 1100b (TEMP register content)
- 00DCh in 2's complement format = 220d
- Temperature= 220 LSB/sensitivity = 220 LSB/ (100 LSB/°C) = 2.2°C
- 5h = CRC of 82000DC0h

20-bit data from 48-bit frames

The temperature data is always 16-bit wide. In 20-bit mode, this needs to be considered. The user has two options:

1. Change frame type for temperature register read to 32-bit by changing FT bit of previous MOSI frame from 1 to 0. Then, convert TEMP data as explained in 16-bit mode.

2. Read TEMP register in 20-bit mode. As data is only 16-bits wide, the remaining LSBs will be all zeroes and they need to be discarded. After that, register content can be converted in similar manner as explained in 16-bit mode.

If TEMP register (15h0010) read result is TEMP = 82000**00DC0**EAh, content is converted to temperature (°C) as follows:

- 82000h = 1 0 0 0001 0000 0 0 00 0000 0b (contains D-bit, address-, status- and DCNT bits and one empty bit)
- Discard last byte (0h).
- 00DCh =0000 0000 1101 1100b (TEMP register content)
- 00DCh in 2's complement format = 220d
- Temperature= 220 LSB/sensitivity = 220 LSB/ (100 LSB/°C) = 2.2°C
- EAh = CRC of 82000DC000h

7.3 Sensor status and counter block

Table 33 Overview of registers for sensor status and counters

Register name	Register description	R/RW	SPI frame bit D	Public address
RATE_DCNT	Data counter for RATE_XYZ2	R	D0	15h0011
ACC_DCNT	Data counter for ACC_XYZ	R	D0	15h0012
FREQ_CNTR	Frequency / sample time counter	R	D0	15h0013
STAT_SUM	Status summary for non-saturation related flags	R	D0	15h0014
STAT_SUM_SAT	Status summary for saturation flags	R	D0	15h0015
STAT_COM	Common status flags, incl. TEMP, 1st level status register	R	D0	15h0016
STAT_RATE_COM	Common gyro status flags (primary channel), 1st level status register	R	D0	15h0017
STAT_RATE_X	RATE_X status flags, 1st level status register	R	D0	15h0018
STAT_RATE_Y	RATE_Y status flags, 1st level status register	R	D0	15h0019
STAT_RATE_Z	RATE_Z status flags, 1st level status register	R	D0	15h001A
STAT_ACC_X	ACC_X status flags, 1st level status register	R	D0	15h001B
STAT_ACC_Y	ACC_Y status flags, 1st level status register	R	D0	15h001C
STAT_ACC_Z	ACC_Z status flags, 1st level status register	R	D0	15h001D
STAT_SYNC_ACTIVE	Status of SYNC on each channel	R	D0	15h001E
STAT_INFO	Low power mode indications	R	D0	15h001F

7.3.1 Data counters

Table 34 Data counter registers

Register name	Register description	R/RW	SPI frame bit D	Public address
RATE_DCNT	Data counter for RATE_XYZ2 output	R	D0	15h0011
ACC_DCNT	Data counter for ACC_XYZ2 output	R	D0	15h0012

Table 35 RATE_DCNT register bit description

Bit name	Bit description	Bits	Reset value
RATE_Z_DCNT	4-bit data counter for RATE_Z output. Data counter value is updated (+1) when a new sample is available from corresponding RATE/ACC output. When counter reaches 4b1111, it rolls back to zero.	[11:8]	4b0000
RATE_Y_DCNT	4-bit data counter for RATE_Y output. Data counter value is updated (+1) when a new sample is available from corresponding RATE/ACC output. When counter reaches 4b1111, it rolls back to zero.	[7:4]	4b0000
RATE_X_DCNT	4-bit data counter for RATE_X output. Data counter value is updated (+1) when a new sample is available from corresponding RATE/ACC output. When counter reaches 4b1111, it rolls back to zero.	[3:0]	4b0000

Table 36 ACC_DCNT register bit description

Bit name	Bit description	Bits	Reset value
ACC_Z_DCNT	4-bit data counter for ACC_Z output. Data counter value is updated (+1) when a new sample is available from corresponding RATE/ACC output. When counter reaches 4b1111, it rolls back to zero.	[11:8]	4b0000
ACC_Y_DCNT	4-bit data counter for ACC_Y output. Data counter value is updated (+1) when a new sample is available from corresponding RATE/ACC output. When counter reaches 4b1111, it rolls back to zero.	[7:4]	4b0000
ACC_X_DCNT	4-bit data counter for ACC_X output Data counter value is updated (+1) when a new sample is available from corresponding RATE/ACC output. When counter reaches 4b1111, it rolls back to zero.	[3:0]	4b0000

7.3.2 Frequency counter / timestamp

Table 37 Frequency counter register

Register name	Register description	R/RW	SPI frame bit D	Public address
FREQ_CNTR	Frequency / sample time counter	R	D0	15h0013

Table 38 FREQ_CNTR register bit description

Bit name	Bit description	Bits
FREQ_CNTR_BIT	14-bit counter. The value of frequency counter register is increased by one with every 16th rising edge of master clock. • MCLK = 1024 * F_PRIM. • Nominal FREQ_CNTR = MCLK/16 = 1510 kHz • If counter reaches 16383 (14b11 1111 1111 1111) it rolls back to zero • Nominal counter reset frequency = 92 Hz	[13:0]

7.3.3 Status summary

Table 39 Status summary register

Register name	Register description	R/RW	SPI frame bit D	Public address
STAT_SUM	Status summary for non-saturation related flags	R	D0	15h0014

Table 40 STAT_SUM register bit description

Bit name	Bit description	Bits	Normal operation value
Reserved	Reserved	[15:8]	8b11111111
STAT_SUM_CMN	Common Status	[7:7]	1b1
STAT_SUM_RATE_X	RATE_X Status	[6:6]	1b1
STAT_SUM_RATE_Y	RATE_Y Status	[5:5]	1b1
STAT_SUM_RATE_Z	RATE_Z Status	[4:4]	1b1
STAT_SUM_ACC_X	ACC_X Status	[3:3]	1b1
STAT_SUM_ACC_Y	ACC_Y Status	[2:2]	1b1
STAT_SUM_ACC_Z	ACC_Z Status	[1:1]	1b1
STAT_SUM_INIT_RDY	Initialization Ready	[0:0]	1b1

7.3.4 Saturation status summary

Table 41 Saturation summary register

Register name	Register description	R/RW	SPI frame bit D	Public address
STAT_SUM_SAT	Status summary for saturation flags	R	D0	15h0015

Table 42 STAT_SUM_SAT register bit description

Bit name	Bit description	Bits	Normal operation value
Reserved	Reserved	[15:15]	1b1
STAT_SUM_SAT_RATE_X1	Saturation status for output RATE_X1	[14:14]	1b1
STAT_SUM_SAT_RATE_Y1	Saturation status for output RATE_Y1	[13:13]	1b1
STAT_SUM_SAT_RATE_Z1	Saturation status for output RATE_Z1	[12:12]	1b1
STAT_SUM_SAT_ACC_X1	Saturation status for output ACC_X1	[11:11]	1b1
STAT_SUM_SAT_ACC_Y1	Saturation status for output ACC_Y1	[10:10]	1b1
STAT_SUM_SAT_ACC_Z1	Saturation status for output ACC_Z1	[9:9]	1b1
STAT_SUM_SAT_ACC_X3	Saturation status for output ACC_X3	[8:8]	1b1
STAT_SUM_SAT_ACC_Y3	Saturation status for output ACC_Y3	[7:7]	1b1
STAT_SUM_SAT_ACC_Z3	Saturation status for output ACC_Z3	[6:6]	1b1
STAT_SUM_SAT_RATE_X2	Saturation status for output RATE_X2	[5:5]	1b1
STAT_SUM_SAT_RATE_Y2	Saturation status for output RATE_Y2	[4:4]	1b1
STAT_SUM_SAT_RATE_Z2	Saturation status for output RATE_Z2	[3:3]	1b1
STAT_SUM_SAT_ACC_X2	Saturation status for output ACC_X2	[2:2]	1b1
STAT_SUM_SAT_ACC_Y2	Saturation status for output ACC_Y2	[1:1]	1b1
STAT_SUM_SAT_ACC_Z2	Saturation status for output ACC_Z2	[0:0]	1b1

7.3.5 Common status

Table 43 Common status register

Register name	Register description	R/RW	SPI frame bit D	Public address
STAT_COM	Common Status flags	R	D0	15h0016

Table 44 STAT_COM register bit description

Bit name	Bit description	Bits	Normal operation value
Reserved	Reserved	[15:11]	5b11111
MCLK_OK	Status of ASIC master clock.	[10:10]	1b1
DUAL_CLOCK_OK	Clock reference status flag	[9:9]	1b1
DSP_OK	Register content integrity status flag	[8:8]	1b1
SVM_OK	SVM self-test status flag	[7:7]	1b1
HV_CP_OK	HV charge pump status flag	[6:6]	1b1
SUPPLY_OK	Voltage supply status flag	[5:5]	1b1
TEMP_OK	Temperature sensor status flag	[4:4]	1b1
NMODE_OK	Normal mode status flag	[3:3]	1b1
NVM_STS_OK	NVM start-up memory-test status flag	[2:2]	1b1
CMN_STS_OK	Start-up self-test status for TEMP and common digital blocks.	[1:1]	1b1
CMN_STS_RDY	Start-up self-test ready for TEMP and common digital blocks.	[0:0]	1b1

7.3.6 Gyroscope common status

Table 45 Gyroscope common status register

Register name	Register description	R/RW	SPI frame bit D	Public address
STAT_RATE_COM	Common gyro status flags (primary channel)	R	D0	15h0017

Table 46 STAT_RATE_COM register bit description

Bit name	Bit description	Bits	Normal operation value
Reserved	Reserved	[15:8]	8b11111111
PRI_AGC_OK	Gyro primary loop status	[7:7]	1b1
GYRO_PRI_OK	Gyro primary loop status	[6:6]	1b1
PRI_START_OK	Gyro primary loop start-up status	[5:5]	1b1
GYRO_HV_OK	Gyro high voltage status	[4:4]	1b1
Reserved	Reserved	[3:3]	1b1
GYRO_SD_STS_OK	Gyro shield detection start-up self-test status	[2:2]	1b1
GYRO_BOND_STS_OK	Gyro bond wire start-up self-test status	[1:1]	1b1
GYRO_STS_RDY_OK	Gyro start-up self-test ready status flag	[0:0]	1b1

7.3.7 Gyroscope status XYZ

Table 47 Gyroscope status registers

Register name	Register description	R/RW	SPI frame bit D	Public address
STAT_RATE_X	RATE_X status flags	R	D0	15h0018
STAT_RATE_Y	RATE_Y status flags	R	D0	15h0019
STAT_RATE_Z	RATE_Z status flags	R	D0	15h001A

Table 48 STAT_RATE_X register bit description

Bit name	Bit description	Bits	Normal operation value
Reserved	Reserved	[15:10]	6b111111
RATE_DEC_X_SAT_OK	Decimated Rate (X2) Output saturation.	[9:9]	1b1
RATE_INTP_X_SAT_OK	Interpolated Rate (X1) Output saturation.	[8:8]	1b1
Reserved	Reserved	[7:7]	1b1
RATE_X_STC_DIG_OK	Status of RATE X Digital Continuous Self-test	[6:6]	1b1
RATE_X_STC_ANA_OK	Status of RATE X Analog Continuous Self-test	[5:5]	1b1
RATE_X_QC_OK	Status of rate X signal	[4:4]	1b1
Reserved	Reserved	[3:2]	1b11
Reserved	Reserved	[1:1]	1b1
Reserved	Reserved	[0:0]	1b1

Table 49 STAT_RATE_Y register bit description

Bit name	Bit description	Bits	Normal operation value
Reserved	Reserved	[15:10]	6b111111
RATE_DEC_Y_SAT_OK	Decimated Rate (Y2) Output saturation.	[9:9]	1b1
RATE_INTP_Y_SAT_OK	Interpolated Rate (Y1) Output saturation.	[8:8]	1b1
Reserved	Reserved	[7:7]	1b1
RATE_Y_STC_DIG_OK	Status of RATE Y Digital Continuous Self-test	[6:6]	1b1
RATE_Y_STC_ANA_OK	Status of RATE Y Analog Continuous Self-test	[5:5]	1b1
RATE_Y_QC_OK	Status of rate Y signal	[4:4]	1b1
Reserved	Reserved	[3:2]	1b11
Reserved	Reserved	[1:1]	1b1
Reserved	Reserved	[0:0]	1b1

Table 50 STAT_RATE_Z register bit description

Bit name	Bit description	Bits	Normal operation value
Reserved	Reserved	[15:10]	6b111111
RATE_DEC_Z_SAT_OK	Decimated Rate (Z2) Output saturation.	[9:9]	1b1
RATE_INTP_Z_SAT_OK	Interpolated Rate (Z1) Output saturation.	[8:8]	1b1
Reserved	Reserved	[7:7]	1b1
RATE_Z_STC_DIG_OK	Status of RATE Z Digital Continuous Self-test	[6:6]	1b1
RATE_Z_STC_ANA_OK	Status of RATE Z Analog Continuous Self-test	[5:5]	1b1
RATE_Z_QC_OK	Status of rate Z signal	[4:4]	1b1
Reserved	Reserved	[3:2]	1b11
Reserved	Reserved	[1:1]	1b1
Reserved	Reserved	[0:0]	1b1

7.3.8 Accelerometer status XYZ

Table 51 Accelerometer status registers

Register name	Register description	R/RW	SPI frame bit D	Public address
STAT_ACC_X	ACC_X status flags	R	D0	15h001B
STAT_ACC_Y	ACC_Y status flags	R	D0	15h001C
STAT_ACC_Z	ACC_Z status flags	R	D0	15h001D

Table 52 STAT_ACC_X register bit description

Bit name	Bit description	Bits	Normal operation value
Reserved	Reserved	[15:11]	5b11111
ACC_X3_SAT_OK	ACC_X3 output saturation.	[10:10]	1b1
ACC_X_DEC_SAT_OK	Decimated ACC (X2) output saturation.	[9:9]	1b1
ACC_X_INTP_SAT_OK	Interpolated ACC (X1) output saturation.	[8:8]	1b1
ACC_X_STC_DIG_OK	Accelerometer X Axis Continuous Self-test status 4	[7:7]	1b1
ACC_X_STC_TCAP_OK	Accelerometer X Axis Test-Cap Continuous Self-test status	[6:6]	1b1
ACC_X_STC_SDD_OK	Accelerometer X Axis Continuous Self-test status 2	[5:5]	1b1
Reserved	Reserved	[4:4]	1b1
Reserved	Reserved	[3:3]	1b1

Bit name	Bit description	Bits	Normal operation value
ACC_X_SD_STS_OK	Accelerometer X Axis Shield Detection Start-up Self-test status	[2:2]	1b1
ACC_X_STS_OK	Accelerometer X Axis Start-up Self-test status	[1:1]	1b1
ACC_X_STS_RDY_OK	Accelerometer X Axis Start-up Self-test ready	[0:0]	1b1

Table 53 STAT_ACC_Y register bit description

Bit name	Bit description	Bits	Normal operation value
Reserved	Reserved	[15:11]	5b11111
ACC_Y3_SAT_OK	ACC_Y3 output saturation.	[10:10]	1b1
ACC_Y_DEC_SAT_OK	Decimated ACC (Y2) output saturation.	[9:9]	1b1
ACC_Y_INTP_SAT_OK	Interpolated ACC (Y1) output saturation.	[8:8]	1b1
ACC_Y_STC_DIG_OK	Accelerometer Y Axis Continuous Self-test status 4	[7:7]	1b1
ACC_Y_STC_TCAP_OK	Accelerometer Y Axis Test-Cap Continuous Self-test status	[6:6]	1b1
ACC_Y_STC_SDD_OK	Accelerometer Y Axis Continuous Self-test status 2	[5:5]	1b1
Reserved	Reserved	[4:4]	1b1
Reserved	Reserved	[3:3]	1b1
ACC_Y_SD_STS_OK	Accelerometer Y Axis Shield Detection Start-up Self-test status	[2:2]	1b1
ACC_Y_STS_OK	Accelerometer Y Axis Start-up Self-test status	[1:1]	1b1
ACC_Y_STS_RDY_OK	Accelerometer Y Axis Start-up Self-test ready	[0:0]	1b1

Table 54 STAT_ACC_Z register bit description

Bit name	Bit description	Bits	Normal operation value
Reserved	Reserved	[15:11]	5b11111
ACC_Z3_SAT_OK	ACC_Z3 output saturation.	[10:10]	1b1
ACC_Z_DEC_SAT_OK	Decimated ACC (Z2) output saturation.	[9:9]	1b1
ACC_Z_INTP_SAT_OK	Interpolated ACC (Z1) output saturation.	[8:8]	1b1
ACC_Z_STC_DIG_OK	Accelerometer Z Axis Continuous Self-test status 4	[7:7]	1b1
ACC_Z_STC_TCAP_OK	Accelerometer Z Axis Test-Cap Continuous Self-test status	[6:6]	1b1
ACC_Z_STC_SDD_OK	Accelerometer Z Axis Continuous Self-test status 2	[5:5]	1b1
Reserved	Reserved	[4:4]	1b1
Reserved	Reserved	[3:3]	1b1
ACC_Z_SD_STS_OK	Accelerometer Z Axis Shield Detection Start-up Self-test status	[2:2]	1b1
ACC_Z_STS_OK	Accelerometer Z Axis Start-up Self-test status	[1:1]	1b1
ACC_Z_STS_RDY_OK	Accelerometer Z Axis Start-up Self-test ready	[0:0]	1b1

7.3.9 Additional status registers

Table 55 Additional status registers

Register name	Register description	R/RW	SPI frame bit D	Public address
STAT_SYNC_ACTIVE	Status of SYNC on each channel	R	D0	15h001E
STAT_INFO	Low power mode indications	R	D0	15h001F
Reserved	Reserved	-	D0	15h0020

Table 56 STAT_SYNC_ACTIVE register bit description

Bit name	Bit description	Bits	Reset value
SYNC_ACTIVE_ACC_Z2	SYNC active in output ACC_Z2	[11:11]	1b0
SYNC_ACTIVE_ACC_Y2	SYNC active in output ACC_Y2	[10:10]	1b0
SYNC_ACTIVE_ACC_X2	SYNC active in output ACC_X2	[9:9]	1b0
SYNC_ACTIVE_RATE_Z2	SYNC active in output RATE_Z2	[8:8]	1b0
SYNC_ACTIVE_RATE_Y2	SYNC active in output RATE_Y2	[7:7]	1b0
SYNC_ACTIVE_RATE_X2	SYNC active in output RATE_X2	[6:6]	1b0
SYNC_ACTIVE_ACC_Z1	SYNC active in output ACC_Z1	[5:5]	1b0
SYNC_ACTIVE_ACC_Y1	SYNC active in output ACC_Y1	[4:4]	1b0
SYNC_ACTIVE_ACC_X1	SYNC active in output ACC_X1	[3:3]	1b0
SYNC_ACTIVE_RATE_Z1	SYNC active in output RATE_Z1	[2:2]	1b0
SYNC_ACTIVE_RATE_Y1	SYNC active in output RATE_Y1	[1:1]	1b0
SYNC_ACTIVE_RATE_X1	SYNC active in output RATE_X1	[0:0]	1b0

Table 57 STAT_INFO register bit description

Bit name	Bit description	Bits	Reset value
Reserved	Reserved	[8:7]	1b0
Reserved	Reserved	[4:3]	1b0
Reserved	Reserved	[6:5]	1b0
ACC_LPM_OK	Accelerometer in Low Power Mode	[2:2]	1b0
RATE_LPM_OK	Gyroscope in Low Power Mode	[1:1]	1b0
SENSOR_LPM_OK	Start-up State Machine in Sensor Low Power Mode	[0:0]	1b0

7.4 Sensor control block

Table 58 Sensor control block register overview

Register name	Register description	R/RW	SPI frame bit D	Public address
Reserved	Reserved	-	D0	15h0021
CTRL_FILT_RATE	RATE_XYZ Filter settings. Common filter for each axis X1/X2, Y1/Y2, Z1/Z2.	RW	D0	15h0025
CTRL_FILT_ACC12	ACC filter setting. Common filter for each ACC axis X1/X2, Y1/Y2, Z1/Z2.	RW	D0	15h0026
CTRL_FILT_ACC3	Filter setting for ACC_X3, ACC_Y3 and ACC_Z3.	RW	D0	15h0027
CTRL_RATE	Settings for Gyro post-processing decimation ratio and dynamic range	RW	D0	15h0028
CTRL_ACC12	Settings for ACC_X12, ACC_Y12, ACC_Z12 post-processing decimation ratio and dynamic range	RW	D0	15h0029
CTRL_ACC3	Settings for ACC_X3, ACC_Y3, ACC_Z3 post-processing shift dynamic range	RW	D0	15h002A
Reserved	Reserved	-	D0	15h002B
Reserved	Reserved	-	D0	15h002C
Reserved	Reserved	-	D0	15h002D
Reserved	Reserved	-	D0	15h002E
CTRL_USER_IF	User controls for SYNC, Data Ready, Strength of SPI PD/PU, slew rate ctrl, hi-speed	RW	D0	15h0033
CTRL_ST	Self-test controls (enable ST and/or request STS)	RW	D0	15h0034
CTRL_MODE	Test mode, EOI, EN_SENSOR	RW	D0	15h0035
CTRL_RESET	SPI soft reset command	RW	D0	15h0036
SYS_TEST	Empty register for testing read/write access	RW	D0	15h0037

7.4.1 Filter settings

Table 59 Filter setting registers

Register name	Register description	R/RW	SPI frame bit D	Public address
CTRL_FILT_RATE	RATE_XYZ Filter settings. Common filter for each axis X1/X2, Y1/Y2, Z1/Z2.	RW	D0	15h0025
CTRL_FILT_ACC12	ACC filter setting. Common filter for each ACC axis X1/X2, Y1/Y2, Z1/Z2.	RW	D0	15h0026
CTRL_FILT_ACC3	Filter setting for ACC_X3, ACC_Y3 and ACC_Z3.	RW	D0	15h0027

Table 60 Bits for setting filters.

Name	Bits	Nominal digital cut-off frequency (-3dB)
LPF0	'000'	68 Hz (default)
LPF1	'001'	30 Hz
LPF2	'010'	13 Hz
LPF3	'011'	280 Hz
LPF4	'100'	370 Hz
LPF5	'101'	235 Hz
LPF6	'110'	Reserved
LPF7	'111'	Bypass

Table 61 CTRL_FILT_RATE register bit description

Bit name	Bit description	Bits	Reset value
FILT_SEL_RATE_Z	Filter setting for RATE_Z1 and RATE_Z2 outputs	[8:6]	3b000
FILT_SEL_RATE_Y	Filter setting for RATE_Y1 and RATE_Y2 outputs	[5:3]	3b000
FILT_SEL_RATE_X	Filter setting for RATE_X1 and RATE_X2 outputs	[2:0]	3b000

Table 62 CTRL_FILT_ACC12 register bit description

Bit name	Bit description	Bits	Reset value
FILT_SEL_ACC_Z12	Filter setting for ACC_Z1 and ACC_Z2 outputs	[8:6]	3b000
FILT_SEL_ACC_Y12	Filter setting for ACC_Y1 and ACC_Y2 outputs	[5:3]	3b000
FILT_SEL_ACC_X12	Filter setting for ACC_X1 and ACC_X2 outputs	[2:0]	3b000

Table 63 CTRL_FILT_ACC3 register bit description

Bit name	Bit description	Bits	Reset value
FILT_SEL_ACC_Z3	Filter setting for ACC_Z3 output	[8:6]	3b000
FILT_SEL_ACC_Y3	Filter setting for ACC_Y3 output	[5:3]	3b000
FILT_SEL_ACC_X3	Filter setting for ACC_X3 output	[2:0]	3b000

7.4.2 Dynamic range and decimation

Table 64 Registers for dynamic range and decimation setting

Register name	Register description	R/RW	SPI frame bit D	Public address
CTRL_RATE	Settings for Gyro post-processing decimation ratio and shift value (dynamic range)	RW	D0	15h0028
CTRL_ACC12	Settings for ACC_X12, ACC_Y12, ACC_Z12 post-processing decimation ratio and shift value (dynamic range)	RW	D0	15h0029
CTRL_ACC3	Settings for ACC_X3, ACC_Y3, ACC_Z3 post-processing shift value (dynamic range)	RW	D0	15h002A

Table 65 RATE nominal dynamic range settings (CTRL_RATE)

Name	Bits	Measurement range (°/s)	Dynamic range (°/s)	Electrical headroom (°/s)	Sensitivity, 16-bit (LSB/(°/s))	Sensitivity, 20-bit (LSB/(°/s))
Undefined	'000'	-	-	-	-	-
DYN1 (default)	'001'	±490	±494.61	±494.61	66.25	1060
DYN2	'010'	±490	±494.61	±494.61	66.25	1060
DYN3	'011'	±245	±247.31	±247.31	132.5	2120
DYN4	'100'	±122	±123.65	±123.65	265	4240

Table 66 ACC12 nominal dynamic range settings (CTRL_ACC12)

Name	Bits	Measurement range (m/s^2)	Dynamic range (m/s^2)	Electrical headroom (m/s^2)	Sensitivity, 16-bit (LSB/(m/s^2))	Sensitivity, 20-bit (LSB/(m/s^2))
Undefined	'000'	-	-	-	-	-
DYN1 (default)	'001'	±160 (XY) ±150 (Z)	±163.84 (XY) ±150 (Z)	±163.84	200	3200
DYN2	'010'	±80	±81.92	±81.92	400	6400
DYN3	'011'	±40	±40.96	±40.96	800	12800
DYN4	'100'	±20	±20.48	±20.48	1600	25600

Table 67 ACC3 nominal dynamic range settings (CTRL_ACC3)

Name	Bits	Measurement range (m/s^2)	Dynamic range (m/s^2)	Electrical headroom (m/s^2)	Sensitivity, 16-bit (LSB/(m/s^2))	Sensitivity, 20-bit (LSB/(m/s^2))
DYN0 (default)	'000'	±160 (XY) ±150 (Z)	±260 (XY) (min) ±150 (Z) (min)	±327.68	100	1600
DYN1	'001'	±160 (XY) ±150 (Z)	±163.84 (XY) ±150 (Z) (min)	±163.84	200	3200
DYN2	'010'	±60	±81.92	±81.92	400	6400
DYN3	'011'	±40	±40.96	±40.96	800	12800
DYN4	'100'	±20	±20.48	±20.48	1600	25600

Table 68 Decimation ratio settings (CTRL_RATE, CTRL_ACC12)

Name	Bits	Reduction factor	Output sample rate	With nominal F_PRIM (kHz)
DEC1	'000' (no decimation)	1	F_PRIM/2	11.8
DEC2	'001'	2	F_PRIM/4	5.9
DEC3	'010'	4	F_PRIM/8	2.95
DEC4	'011'	8	F_PRIM/16	1.475

Name	Bits	Reduction factor	Output sample rate	With nominal F_PRIM (kHz)
DEC5	'100'	16	F_PRIM/32	0.7375

Table 69 CTRL_RATE Register bit description

Bit name	Bit description	Bits	Reset value
DYN_RATE_XYZ1	Dynamic Range for RATE_X1/Y1/Z1 outputs.	[14:12]	3b001
DYN_RATE_XYZ2	Dynamic Range for RATE_X2/Y2/Z2 outputs.	[11:9]	3b001
DEC_RATE_Z2	Decimation ratio for RATE_Z2 output	[8:6]	3b000
DEC_RATE_Y2	Decimation ratio for RATE_Y2 output	[5:3]	3b000
DEC_RATE_X2	Decimation ratio for RATE_X2 output	[2:0]	3b000

Table 70 CTRL_ACC12 Register bit description

Bit name	Bit description	Bits	Reset value
DYN_ACC_XYZ1	Dynamic Range for ACC_X1/Y1/Z1 outputs.	[14:12]	3b001
DYN_ACC_XYZ2	Dynamic Range for ACC_X2/Y2/Z2 outputs.	[11:9]	3b001
DEC_ACC_Z2	Decimation ratio for ACC_Z2 output	[8:6]	3b000
DEC_ACC_Y2	Decimation ratio for ACC_Y2 output	[5:3]	3b000
DEC_ACC_X2	Decimation ratio for ACC_X2 output	[2:0]	3b000

Table 71 CTRL_ACC3 Register bit description

Bit name	Bit description	Bits	Reset value
DYN_ACC_XYZ3	Dynamic Range for ACC_X3/Y3/Z3 outputs.	[2:0]	3b000

7.4.3 Saturation flag user control

Table 72 Registers for saturation flag user control

Register Name	Register Description	R/RW	SPI frame bit D	Public address
CTRL_RATE_FLAG_1	RATE_XYZ Pre PP SAT_OK Filter user configuration	RW	D0	15h002B
CTRL_RATE_FLAG_2	RATE_XYZ PP SAT_OK Filter user configuration	RW	D0	15h002C
CTRL_ACC_FLAG_1	ACC_XYZ Pre PP SAT_OK Filter user configuration	RW	D0	15h002D
CTRL_ACC_FLAG_2	ACC_XYZ PP SAT_OK Filter user configuration	RW	D0	15h002E

Any change to the saturation flag user control registers must be verified on system level to ensure that the desired safety functionality can be achieved with selected settings.

Table 73 CTRL_RATE_FLAG_1 register bit description

Bit Name	Bit Description	Bits	Reset Value
RATE_Z_SAT_CTRL1	User configuration for filtering saturation status flags based on consecutive flag count before post-processing blocks: Analog saturation filter parameters: Fault count range = 1-60 Fault count = (4-bit decimal string [4:1]) * 4, (Min = 1) Nominal flag detection frequency = 1.5 kHz Digital saturation filter parameters: Fault count range = 1-496 Fault count = (5-bit decimal string [4:0]) * 16, (Min = 1) Nominal flag detection frequency = 11.8 kHz	[14:10]	5d00000
RATE_Y_SAT_CTRL1		[9:5]	5d00000
RATE_X_SAT_CTRL1		[4:0]	5d00000

Table 74 CTRL_RATE_FLAG_2 register bit description

Bit Name	Bit Description	Bits	Reset Value
RATE_Z_SAT_CTRL2	User configuration for filtering saturation status flags based on consecutive flag count for post-processing blocks (low pass filter, dynamic range scaling and decimation/interpolation): Digital saturation filter parameters: Fault count range = 1-496 Fault count = (5-bit decimal string [4:0]) * 16, (Min = 1) Nominal flag detection frequency = 11.8 kHz	[14:10]	5d00000
RATE_Y_SAT_CTRL2		[9:5]	5d00000
RATE_X_SAT_CTRL2		[4:0]	5d00000

Table 75 CTRL_ACC_FLAG_1 register bit description

Bit Name	Bit Description	Bits	Reset Value
ACC_Z_SAT_CTRL1	User configuration for filtering saturation status flags based on consecutive flag count before post-processing blocks: Digital saturation filter parameters: Fault count range = 1-496 Fault count = (5-bit decimal string [4:0]) * 16, (Min = 1) Nominal flag detection frequency = 11.8 kHz	[14:10]	5d00000
ACC_Y_SAT_CTRL1		[9:5]	5d00000
ACC_X_SAT_CTRL1		[4:0]	5d00000

Table 76 CTRL_ACC_FLAG_2 register bit description

Bit Name	Bit Description	Bits	Reset Value
ACC_Z_SAT_CTRL2	User configuration for filtering saturation status flags based on consecutive flag count for post-processing blocks (low pass filter, dynamic range scaling and decimation/interpolation): Digital saturation filter parameters: Fault count range = 1-496 Fault count = (5-bit decimal string [4:0]) * 16, (Min = 1) Nominal flag detection frequency = 11.8 kHz	[14:10]	5d00000
ACC_Y_SAT_CTRL2		[9:5]	5d00000
ACC_X_SAT_CTRL2		[4:0]	5d00000

7.4.4 User interface control

Table 77 User interface control register

Register name	Register description	R/RW	SPI frame bit D	Public address
CTRL_USER_IF	User controls for SYNC, Data Ready, Strength of SPI PD/PU, slew rate ctrl, hi-speed	RW	D0	15h0033

Table 78 CTRL_USER_IF register bit description

Bit name	Bit description	Bits	Reset value
SPI_SUPPLY	SPI_MISO and DRY buffer supply range: x0 - 3.3 V+/-10% or 2.5 V+/-10% (default) 01 - 1.8 V+/-8% User must write bits to '01' if 1.8V VDDIO voltage is used.	[15:14]	2b00
FTREE_TDEL	Typical delay time of 1st level status clearance. When user reads data register, the associated 1st level status register is cleared after TDEL. 00 - 0.078 ms 01 - 0.625 ms 10 - 2.5 ms (default) 11 – 5 ms	[13:12]	2b10
SYNC_POL	SYNC polarity control. 0 - high active (rising edge) (default) 1 - low active (falling edge).	[11:11]	1b0
SYNC_TOC_TH	SYNC time-out counter control. Counter starts to increase value after rising edge of DRY_SYNC. When counter reaches threshold value selected by SYNC_TOC_TH, data collection is restarted. Counter is reset by falling edge of DRY_SYNC. 00 - 2^15 x MCLK (1.275...1.448 ms) 01 - 2^16 x MCLK (2.550...2.896 ms) 10 - 2^17 x MCLK (5.100...5.792 ms) 11 - 2^18 x MCLK (10.199...11.584 ms)	[10:9]	2b00
SYNC_DEC_EN	Enables data freezing for Decimated output registers and their corresponding data counter registers. Can be set both simultaneously and separately with SYNC_INTP_EN. If user enables SYNC and Data Ready simultaneously, Data Ready takes priority. 0 - Disable 1 - Enable	[8:8]	1b0
SYNC_INTP_EN	Enables data freezing for interpolated output registers and their corresponding data counter registers. Can be set both simultaneously and separately with SYNC_DEC_EN. If user enables SYNC and Data Ready simultaneously, Data Ready takes priority. 0 - Disable 1 - Enable	[7:7]	1b0
DRY_POL	Data Ready polarity control. 0 - high active (default) 1 - low active	[6:6]	1b0
DRY_DRV_EN	Enables Data Ready function. Writing this bit to 1 disables SYNC function, as they cannot be used simultaneously due to shared I/O pin. 1 - DRY buffer enabled 0 - DRY buffer disabled.	[5:5]	1b0
SPI_PULL_WEAK	Control of SPI pull-down resistor strength 0- strong pull-down (default) 1 - weak pull-down.	[4:4]	1b0

Bit name	Bit description	Bits	Reset value
MISO_SR_CTRL	MISO Slew Rate control 0 - SR control disabled without static current (fast rise/fall time ~<1ns). (This option is not supported by Murata) 1 - SR control enabled with static current (default)	[3:3]	1b1
DRY_SR_CTRL	DRY Slew Rate control 0 - SR control disabled without static current (fast rise/fall time ~<1ns). (This option is not supported by Murata) 1 - SR control enabled with static current (default)	[2:2]	1b1
DRY_HI_SPD	DRY High-Speed mode control 0 – 10 MHz mode, SafeSPI2 standard 1 – 25 MHz mode, non-standard high-speed SPI	[1:1]	1b0
MISO_HI_SPD	MISO High Speed mode control 0 – 10 MHz mode, SafeSPI2 standard 1 – 25 MHz mode, non-standard high-speed SPI	[0:0]	1b0

7.4.5 Self-test controls

Table 79 Register for self-test controls

Register name	Register description	R/RW	SPI frame bit D	Public address
CTRL_ST	Self-test controls (enable ST and/or request STS)	RW	D0	15h0034

Table 80 CTRL_ST register bit description

Bit name	Bit description	Bits	Reset value
Reserved	Reserved	[12:12]	1b0
RATE_STC_CTRL	Disable RATE_Z, RATE_Y and RATE_X continuous self-tests by writing bits to '000'	[11:9]	3b111
Reserved	Reserved	[8:8]	1b1
Reserved	Reserved	[7:7]	1b1
Reserved	Reserved	[6:6]	1b1
ACC_Z_STC_MASK2	Mask ACC_Z continuous self-test flag (STC_SDD) by writing bit to '0'	[5:5]	1b1
ACC_Y_STC_MASK2	Mask ACC_Y continuous self-test flag (STC_SDD) by writing bit to '0'	[4:4]	1b1
ACC_X_STC_MASK2	Mask ACC_X continuous self-test flag (STC_SDD) by writing bit to '0'	[3:3]	1b1
ACC_STS_CTRL	Disable ACC start-up self-test by writing bit to '0'	[2:2]	1b1
Reserved	Reserved	[1:1]	1b1
ACC_STS_REQ	Request ACC start-up self-test by writing bit to '1'. The user must write bit back to '0' after test is completed. Recommended wait time before writing '0' is 155ms. Test is done automatically during start-up.	[0:0]	1b0

7.4.6 Sensor mode control and soft reset

Table 81 Registers for setting EN_SENSOR, EOI and soft reset

Register name	Register description	R/RW	SPI frame bit D	Public address
CTRL_MODE	EOI, EN_SENSOR	RW	D0	15h0035
CTRL_RESET	SPI soft reset command	RW	D0	15h0036

Table 82 CTRL_MODE register bit description

Bit name	Bit description	Bits	Reset value
Reserved	Reserved	[3:2]	2b00
EOI_CTRL	End of Initialization. Writing bit to '1' locks all R/W registers except soft reset control and SYS_TEST. Freezes also start-up status flag status in 1st level status registers. Reset of component is needed to set EOI back to '0'.	[1:1]	1b0
EN_SENSOR	Enable RATE and ACC measurement. Write bit to '1' according to start-up sequence.	[0:0]	1b0

Table 83 CTRL_RESET register bit description (not recommended)

Bit name	Bit description	Bits	Reset value
SOFTRESET_CTRL	Writing 0x0000A (4b1010) to this field generates a SPI soft reset. SPI Communication is not allowed during 2ms after SPI SOFTRESET. Please note that SPI software reset is not fully reliable and has 6 out of 1024 chance for failure and sate where component is only recoverable by reset pin or power down.	[3:0]	4b0000

7.4.7 Whoami, traceability, identification, and spare registers

Table 84 Miscellaneous registers

Register name	Register description	R/RW	SPI frame bit D	Public address
SYS_TEST	Empty register for testing read/write access	RW	D0	15h0037
SPARE_1	Reserved	R	D0	15h0038
SPARE_2	Reserved	R	D0	15h0039
SPARE_3	Reserved	R	D0	15h003A
ASIC_ID	ASIC revision	R	D0	15h003B
COMP_ID	Component type	R	D0	15h003C
SN_ID1	Component Serial Number field 1	R	D0	15h003D
SN_ID2	Component Serial Number field 2	R	D0	15h003E
SN_ID3	Component Serial Number field 3	R	D0	15h003F

The component is traceable by a unique electronically readable serial number that matches to the component markings. Serial number is stored in NVM registers SN_ID1, SN_ID2 and SN_ID3. Serial number string format: DDDYYFHHHHH01

Table 85 Serial number calculation example where final serial number result: 354230 1497H01

Symbol	DDDYY	F	HHHH	H01
Meaning	Date code	-	Running number	Product code
Register and bits	SN_ID2 [15:0]	SN_ID1 [3:0]	SN_ID3 [15:0]	Not stored to register
Example register content	0x8A5F	0x0	0x1497	-
Processing	16-bit unsigned integer to decimal string, 0....65535	4-bit hex to string, 0...F	16-bit hexadecimal running number	Fixed value
Result	35423	0	1497	H01

Table 86 SYS_TEST register bit description

Bit name	Bit description	Bits	Reset value
SYS_TEST	16-bit read/write register which can be used to check accessibility of the device, or if multiple devices are connected to the SPI bus to check if CS signals are working properly. Due to off-frame protocol, test sequence should be as follows: 1. Write data into SYS_TEST register 2. Read SYS_TEST register content 3. Issue a dummy read command to receive response from previous frame SYS_TEST register is not locked by EOI bit.	[15:0]	16h0000

Table 87 ASIC_ID register bit description

Bit name	Bit description	Bits
ASIC_TYPE	ASIC type	[11:8]
ASIC_REV	ASIC major revision	[7:4]
ASIC_REV_MINOR	ASIC minor revision	[3:0]

Table 88 COMP_ID register bit description

Bit name	Bit description	Bits
COMP_ID	Component version. e.g., SCH16T-K30 = 0000 0010 0000 0000 (0x0200)	[15:0]

Table 89 SN_ID1 register bit description

Bit name	Bit description	Bits
SN_ID1	“F” part of component serial number (4-bit hex to string, 0...F) Format: DDDYYFHHHHH01	[3:0]

Table 90 SN_ID2 register bit description

Bit name	Bit description	Bits
SN_ID2	“DDDYY” part of serial number (16-bit unsigned integer to decimal string, 0....65535). DDD is the production day as ordinal number from the beginning of the year and YY is production year. Format: DDDYYFHHHHH01	[15:0]

Table 91 SN_ID3 register bit description

Bit name	Bit description	Bits
SN_ID3	“HHHH” part of component serial number (16-bit hexadecimal running number) Format: DDDYYFHHHHH01	[15:0]

8 Application information

8.1 Application circuitry and external component characteristics

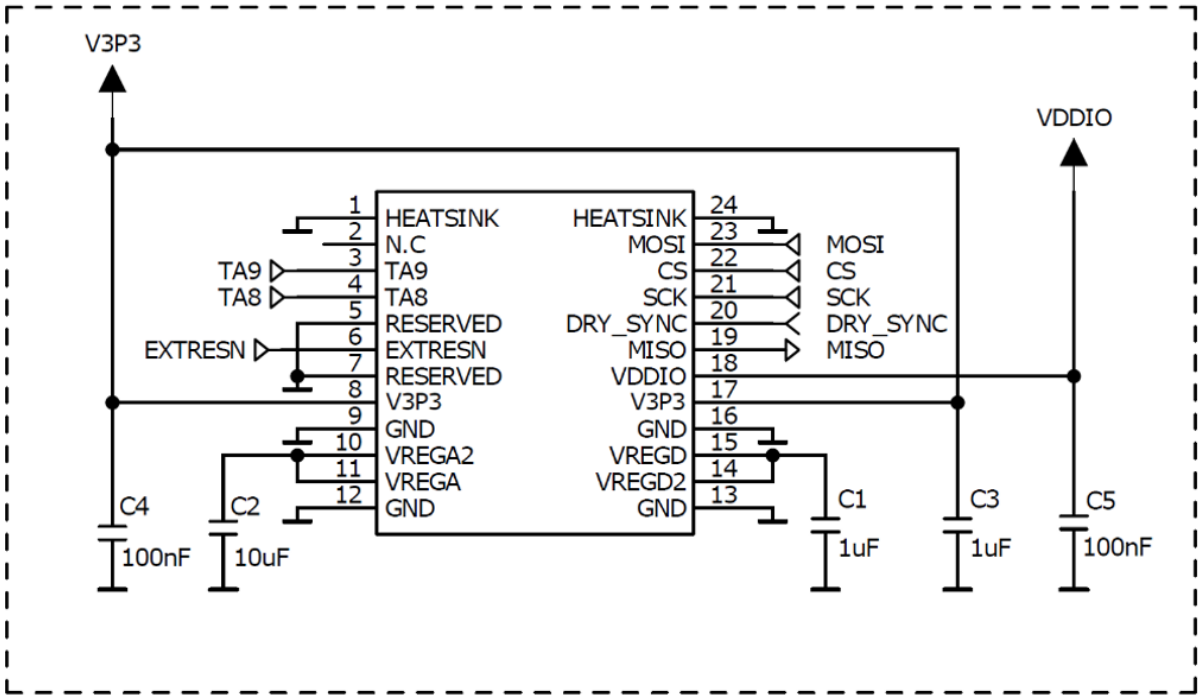

Figure 19 Application schematic

Table 92 External component description for SCH16T series

Symbol	Description	Min	Nom	Max	Unit
C1 C3	Decoupling capacitor between VREGD/VREGD2 (C1)/3p3 pin17 (C3) and GND (ESR <100 mOhm @ 1 MHz)	0.7	1	1.3	uF
C2	Decoupling capacitor between VREGA/VREGA2 and GND (ESR <100 mOhm @ 1 MHz)	4.6	10	15	uF
C4 C5	Decoupling capacitor between V3p3 pin8 (C4)/VDDIO (C5) and GND (ESR <100 mOhm @ 1 MHz)	70	100	130	nF

All GND and I/O needs to be connected as shown in the schematic above. Additional notes about the pin connections:

- TA8 and TA9 must be connected to ground if they are not used by MCU because TA chip select address needs to be defined. Default ‘00’ TA chip select address is used for example operations.
- If EXTRESN pin is not driven by MCU, it must be connected to VDDIO directly or with max 20kohm PU resistor.
- DRY_SYNC must be left floating if these features are not used.
- N.C. pin 2 must be left floating as indicated by schematic.

8.2 General application PCB layout

A PCB layout example of the SCH16T series component is presented in *Figure 20 Reference PCB layout*. The presented layout can be used as such or only as reference. When designing the PCB, it is advised to follow general layout guidelines below:

- Connect SMD decoupling capacitors right next to the component on top layer.
- Each ground pin should be connected to the ground directly.
- A ground plane under the component is not recommended due to possible electromagnetic interference effect to the SCH16T series component (ground vias and lines can be freely routed).
- Signal lines of this component can be freely routed under the component. It is expected that signal lines of other components have also no effect on the SCH16T series component, but the user is advised to verify functionality before implementation.
- Keep all routing as low resistance as possible.

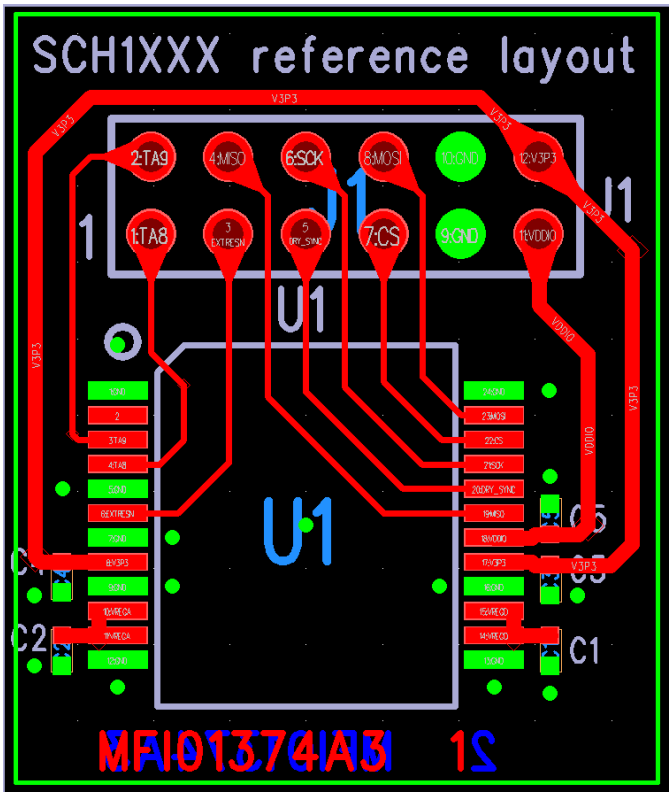

Figure 20 Reference PCB layout

8.3 Assembly instructions

Application PCB design, conformal coating, mechanical shocks, material selection, environment and component assembly process can impact the sensor performance. Please refer to Assembly instructions for SCH1000 series (Murata APP 10871) for related details.

Murata reserves all rights to modify this document without prior notice.