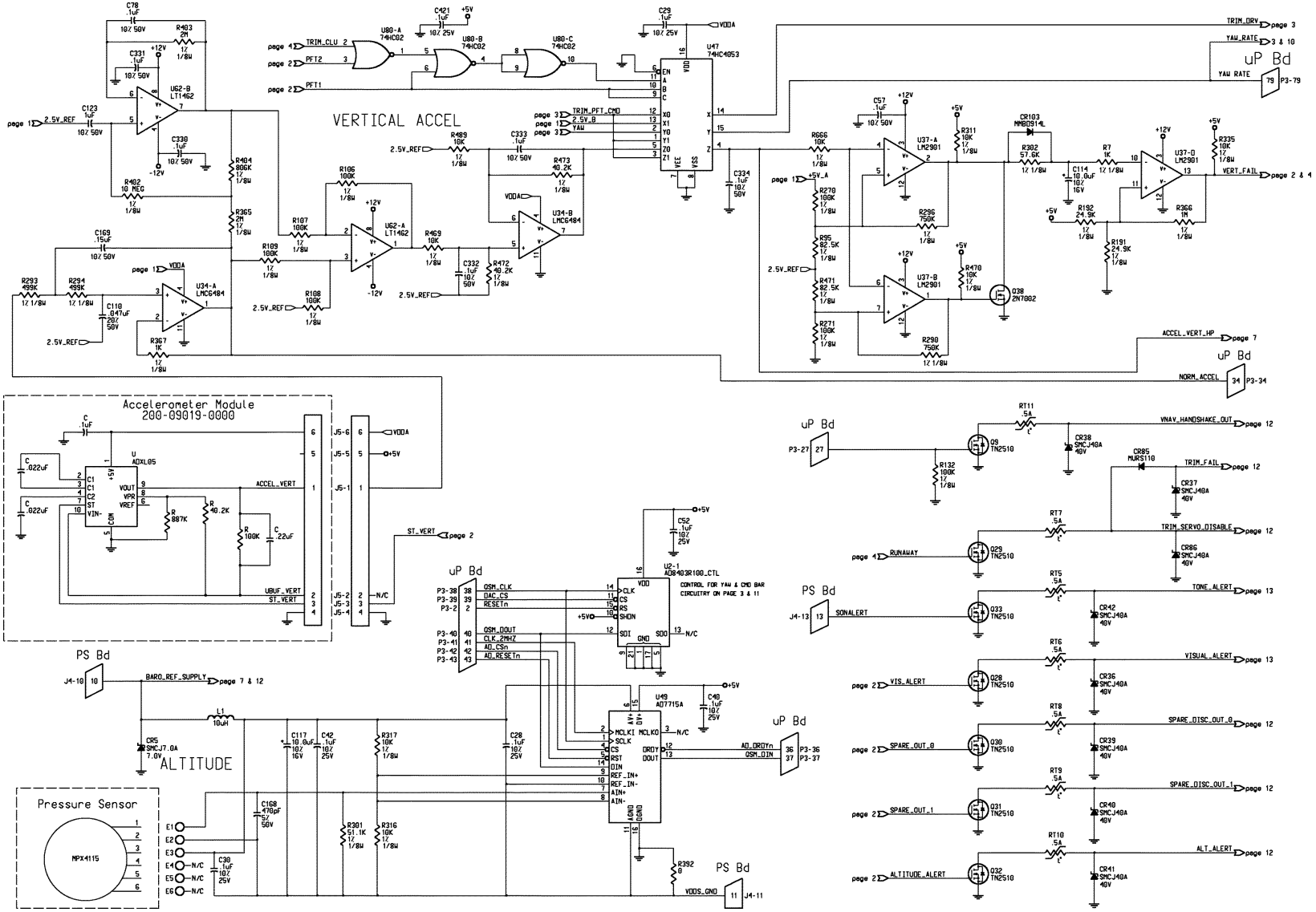

FIGURE 6-9 I/O BOARD SCHEMATIC
(Sheet 6 of 13)